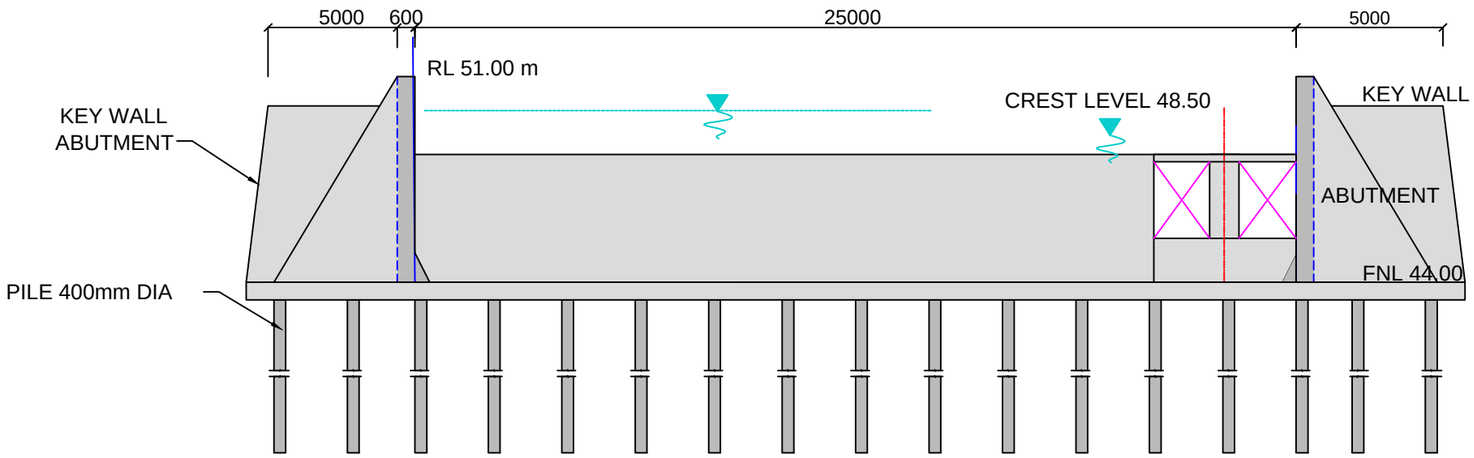

(SCALE 1:400)

LONGITUDINAL SECTION OF WEIR

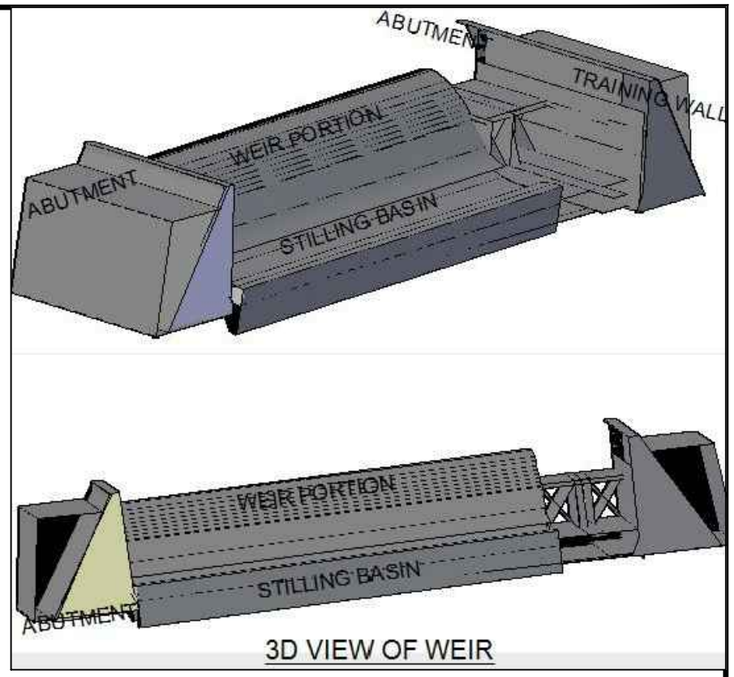

3D VIEW OF WEIR

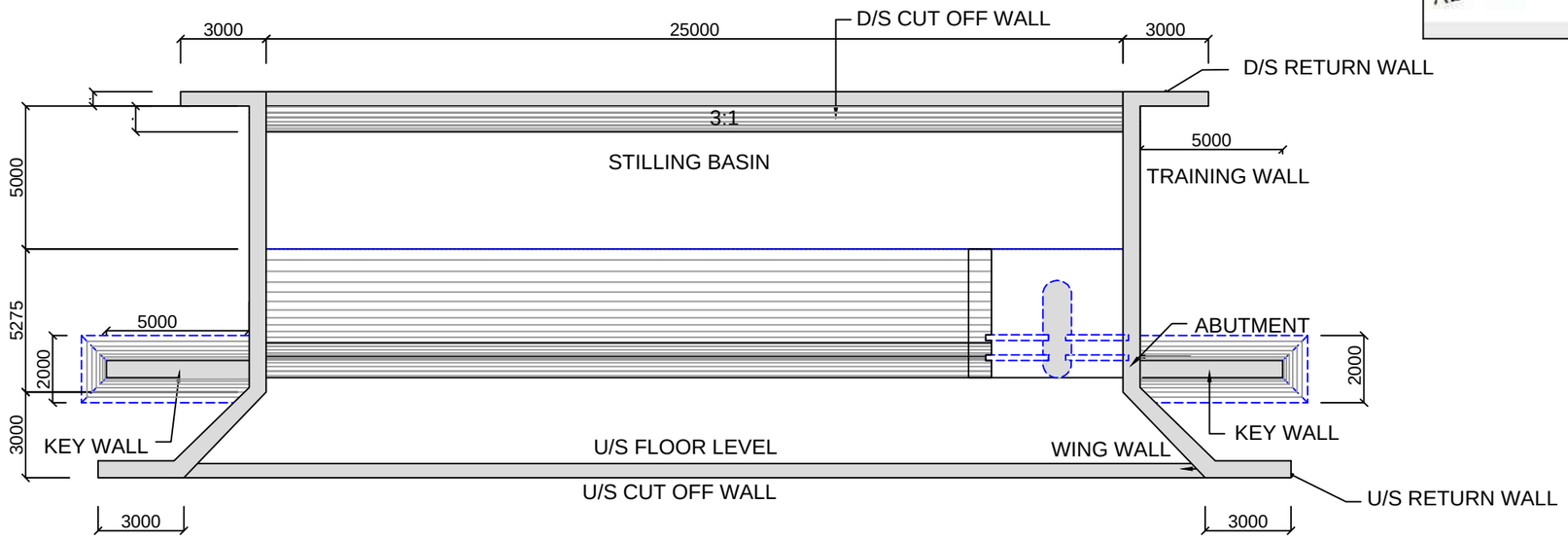

PLAN OF WEIR

TENDER PURPOSE ONLY

ALL THE LEVELS AND DIMENSIONS ARE INDICATIVE.
DETAIL & DESIGN DRAWINGS SHOULD BE PREPARED
BY THE CONTRACTOR AFTER PERFORMING NECESSARY INVESTIGATION.

FOR R0 ISSUE ONLY

	CLEARED	
DEPT	SIGNATURE	DATE
CIVIL		
ELEC		
I&C		
MECH		

FILE NAME :

CLIENT : GUWAHATI SMART CITY LIMITED

PROJECT : BORSOLA BEEL DEVELOPMENT PROJECT

GUWAHATI SMART CITY LIMITED

GENERAL ARRANGEMENT DRAWING OF DIVERSION WEIR

TATA CONSULTING ENGINEERS LIMITED
MUMBAI

ISSUE	REVISIONS	DRN	CIVIL	ELEC	I&C	MECH		APPD	DATE
			CLEARED						

SCALE: 1:200	APPROVED	DATE (R0 ISSUE)
DEL.CENTRE-DISC:		DATE
DRN:		
CHD:	DWG NO TCE.10477A-CV-3000-GA-30211	SHEET 1 OF 2

SIZE-A3

FILE NAME: F-041-Rev-R5.dwg

TCE FORM NO. 042 R5