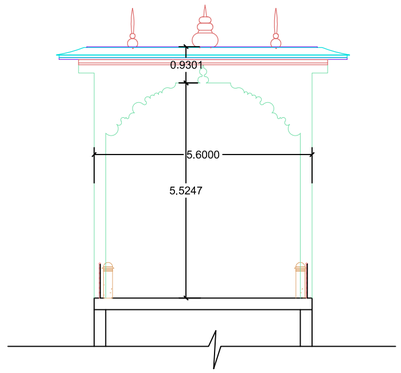

GATE -2

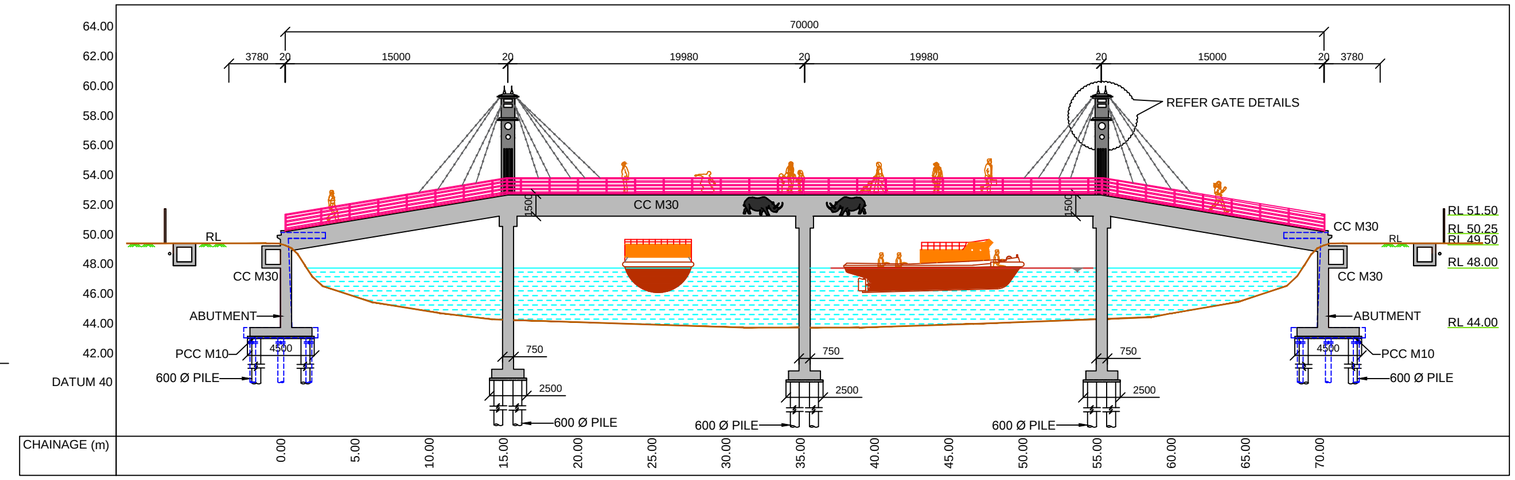

SECTION X-X

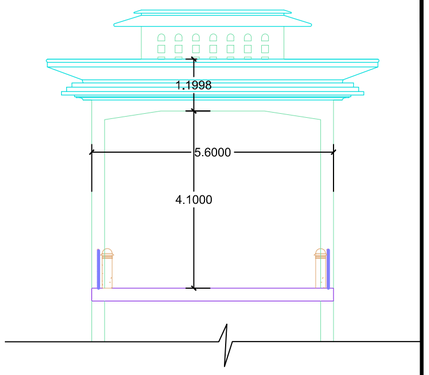

GATE -1

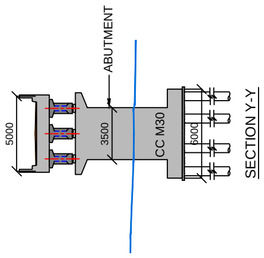

SECTION Y-Y

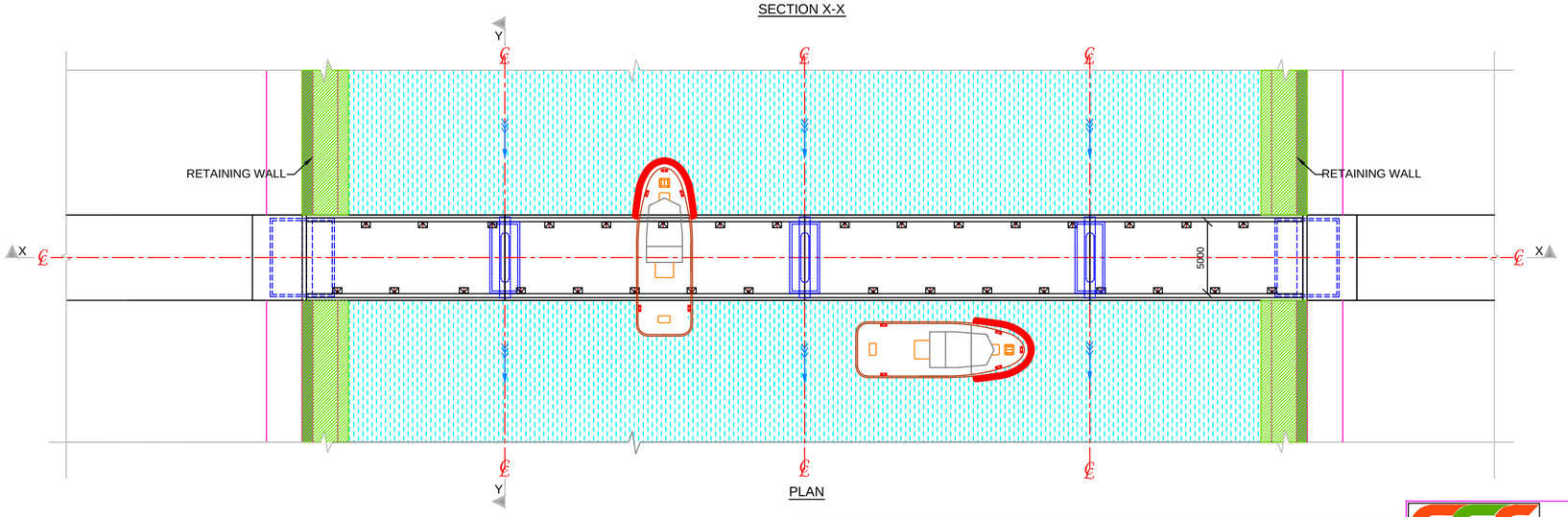

PLAN

TENDER PURPOSE ONLY

ALL THE LEVELS AND DIMENSIONS ARE INDICATIVE.
DETAIL & DESIGN DRAWINGS SHOULD BE PREPARED
BY THE CONTRACTOR AFTER PERFORMING NECESSARY INVESTIGATION.

ISSUE	REVISIONS	DRN	CIVIL	ELEC	I&C	MECH			APPD	DATE
			CLEARED							

FOR R0 ISSUE ONLY		
CLEARED		
DEPT	SIGNATURE	DATE
CIVIL		
ELEC		
I&C		
MECH		

FILE NAME :

CLIENT : GUWAHATI SMART CITY LIMITED

PROJECT : BORSOLA BEEL DEVELOPMENT PROJECT

GUWAHATI SMART CITY LIMITED

DO NOT SCALE

PLAN AND SECTION OF MAJOR BRIDGE

TATA CONSULTING ENGINEERS LIMITED
MUMBAI

SCALE: 1:250	APPROVED	DATE (R0 ISSUE)
DEL.CENTRE-DISC:		DATE (CURRENT ISSUE)
DRN:		
CHD:	DWG NO TCE.10477A-CV-3000-GA-30213	ISSUE SHEET 1 OF 2

SIZE-A2

FILE NAME: F-041-Rev-R5.dwg

TCE FORM NO. 042 R5