TITLE: SCHEMATIC SLD FOR BOROSOLA BEEL LANDSCAPE AREA AND STP SHEET 2 OF 3

DWG NO: TCE.10477A-EL-4001-AU-40006

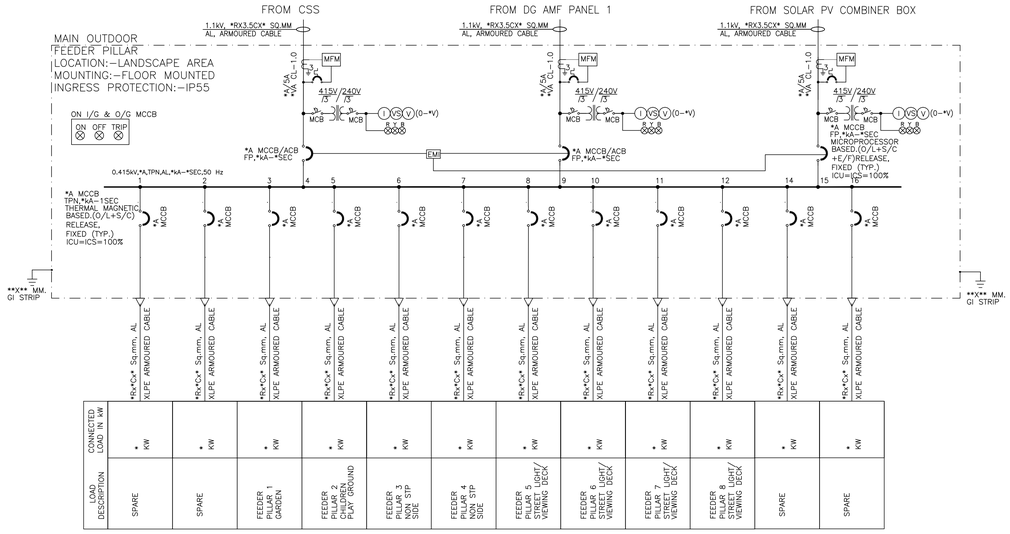

LOAD DESCRIPTION	CONNECTED LOAD IN kW
SPARE	* KW
SPARE	* KW
FEEDER PILLAR 1 GARDEN	* KW
FEEDER PILLAR 2 CHILDREN PLAY GROUND	* KW
FEEDER PILLAR 3 NORTH STP SIDE	* KW
FEEDER PILLAR 4 NORTH STP SIDE	* KW
FEEDER PILLAR 5 STREET LIGHT/ VIEWING DECK	* KW
FEEDER PILLAR 6 STREET LIGHT/ VIEWING DECK	* KW
FEEDER PILLAR 7 STREET LIGHT/ VIEWING DECK	* KW
FEEDER PILLAR 8 STREET LIGHT/ VIEWING DECK	* KW
SPARE	* KW
SPARE	* KW

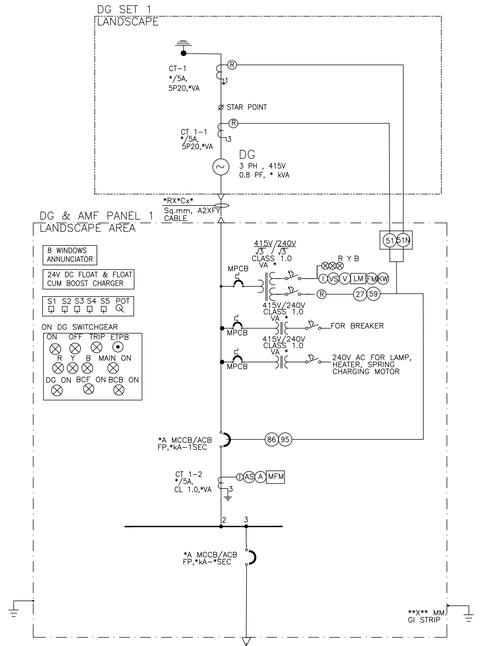

LOAD DESCRIPTION	CONNECTED LOAD IN kW
PCC PANEL	* KW

LEGEND:

	LOAD BREAK SWITCH	R	RELAYING
		I	INSTRUMENTATION
	AIR CIRCUIT BREAKER	VPI	VOLTAGE PRESENCE INDICATOR
		FPI	FAULT PASSAGE INDICATOR
	VACCUM CIRCUIT BREAKER (SF6 ENCLOSED, EDO)	86	LOCK OUT RELAY
		27-3/4	UNDERVOLTAGE RELAY
	AUTO TRANSFER SWITCH	81	UNDERFREQUENCY RELAY
		SC	SPRING CHARGED
	MCB	TCH	TRIP CIRCUIT HEALTHY
	MCCB	50	INST. O/C PROTECTION
	MPCB	50N	INST. E/F PROTECTION
	CABLE GLAND	51	IDMT. O/C PROTECTION
	INDICATING LAMP	NC	NORMALLY CLOSED
	PUSH BUTTON	NO	NORMALLY OPEN
	CURRENT TRANSFORMER (CT) (FIGURE INDICATES NO. OF CT's)	METER	LT ENERGY METER
	POTENTIAL TRANSFORMER	49W	WINDING TEMP. HIGH INDICATOR WITH ALARM & TRIP CONTACTS
LM	LOAD MANAGER	49O	OIL TEMP. HIGH INDICATOR WITH ALARM & TRIP CONTACTS
	DISTRIBUTION TRANSFORMER	SP	SERVICE POSITION
MFM	MULTIFUNCTION METER	TP	TEST POSITION
	CHOKE	EP	EARTH POSITION
	DIESEL GENERATOR	ETPB	EMERGENCY TRIP PUSH BUTTON
		95	TRIP SUPERVISION RELAY
AS	AMMETER SELECTOR SWITCH		ELECTRICAL PANEL
A	ANALOG AMMETER		
VS	VOLTMETER SELECTOR SWITCH		LOAD BREAK SWITCH
V	ANALOG VOLTMETER		
	PUSH BUTTON STATION	A-M	AUTO MANUAL SELECTOR SWITCH
E.M.I.	ELECTRICAL- MECHANICAL INTERLOCK	63	PRESSURE RELIEF DEVICE
BCF ON	BATTERY CHARGER BOOST MODE ON	63	BUCHHOLZ RELAY
BCB ON	BATTERY CHARGER FLOAT MODE ON	S2	DG AUTO/MAUAL/TEST SWITCH
S1	DG CONTROL SUPPLY ON/OFF SWITCH	S3	BATTERY CHARGER FLOAT /BOOST/OFF SWITCH
S4	SPEED RAISE	S5	SPEED LOWER
POT	POTENTIOMETER	NET-LT METER	NET LT ENERGY METER
	CONTACTOR		
	INVERTER		PV MODULE
	DC SWITCH		DC FUSE

NOTES:

1. THIS SLD IS FOR REFERENCE PURPOSE ONLY, BIDDER MAY SUBMIT BETTER ALTERNATIVE SCHEME FOR POWER DISTRIBUTION ALONG WITH THE BID.
2. RATINGS, SIZES & QUANTITIES OF EQUIPMENTS (WHEREVER GIVEN) ARE MINIMUM REQUIREMENTS BIDDER SHALL CALCULATE EQUIPMENT SIZES & RATINGS BASED ON DESIGN CRITERIA AND TENDER SPECIFICATION GIVEN IN TENDER.
3. LT PANELS HAVING I/G OR O/G FEEDER CURRENT RATING ABOVE 630A SHALL HAVE ACB.
4. ALL AIR CIRCUIT BREAKERS SHALL BE WITH Ics=Icu=Icw=100% & ALL MCCBs SHALL BE WITH Ics=Icu=100%.
5. ALL MCCBs SHALL BE CURRENT LIMITING TYPE.
6. MCCB/ACB IN THE I/C AND B/C FOR MAIN OUTDOOR FEEDER PILLAR;I/C AND O/G FOR DG AMP PANEL SHALL BE AS PER FOLLOW
   - ACB FEEDERS SHALL BE FP, EDO TYPE,MICROPROCESSOR BASED O/C, S/C & INBUILT E/F RELEASE.
   - MCCB FEEDERS SHALL BE FP, DRAW OUT TYPE, MICROPROCESSOR BASED O/C, S/C & INBUILT E/F RELEASES.
7. APFC PANEL FOR THE LANDSCAPE ARE SHALL BE INBUILT IN THE CSS
8. TVM METER SHALL BE PROVIDED FOR EACH SOLAR TREE FOR MEASURE OF INDIVIDUAL SOLAR TREE GENERATION.
9. DG SHALL ALSO BE PROVIDED WITH THE REVERSE POWER FLOW RELAY AND PF METER.

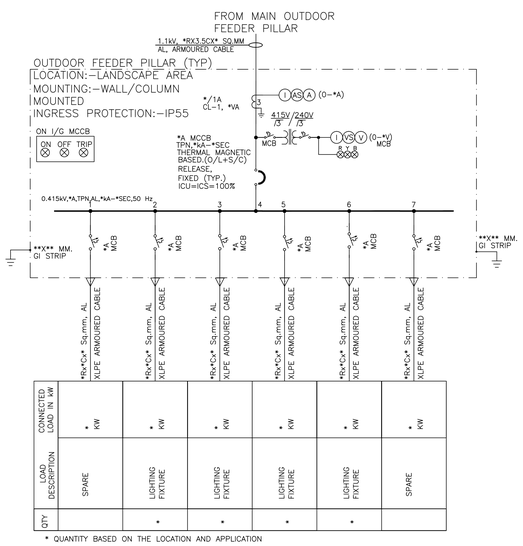

LOAD DESCRIPTION	CONNECTED LOAD IN kW	QTY
SPARE	* KW	
LIGHTING FIXTURE	* KW	*
LIGHTING FIXTURE	* KW	*
LIGHTING FIXTURE	* KW	*
LIGHTING FIXTURE	* KW	*
SPARE	* KW	

* QUANTITY BASED ON THE LOCATION AND APPLICATION

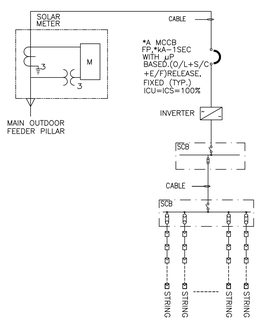

SOLAR PV SYSTEM(TYP) FOR SOLAR TREE

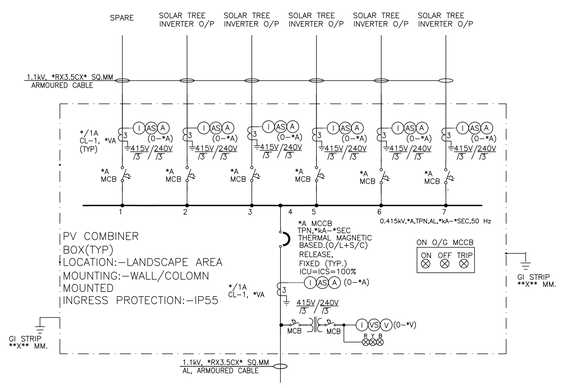

TO MAIN FEEDER PILLAR

	SIGN.												
	INITIALS												
	REVISIONS												
	SIGN.												
	INITIALS												
	REVISIONS												
	SIGN.												
	INITIALS												
	REVISIONS												
	SIGN.												
	INITIALS												
	REVISIONS												
	SIGN.												
	INITIALS												
	REVISIONS												
	SIGN.												
	INITIALS												02-08-2017
ISSUE		DRN	DSN	CHD	CV	EL	IC	ME		PE/PM	APPD	DATE	
					CLEARED								

FOR TENDER PURPOSE

DO NOT SCALE

'P' (PRELIMINARY) ISSUES ARE NOT TO BE USED FOR CONSTRUCTION / FABRICATION BUT ARE ISSUED FOR LIMITED PURPOSES ONLY AS INDICATED IN THE SMALL BLOCK ABOVE THIS BLOCK.

CONSTRUCTION / FABRICATION WORK IS PERMITTED ON 'R' (RELEASED) ISSUES ONLY.

INFORMATION CONTAINED WITHIN 'HOLD' IS NOT RELEASED FOR CONSTUCTION / FABRICATION. FIELD MUST GET DESIGN OFFICE TO CLEAR 'HOLDS' IN TIME BEFORE PROCEEDING WITH ANY CONSTRUCTION / FABRICATION WORK RELATED TO 'HOLDS'.

Proprietary rights of the information contained herein belong to TCE. This information is intended to be used for the mentioned purpose/project only. In case of misuse of information and any claim arising thereof, cost and consequence will be on the party misusing the information.

FILE NAME : TCE.10477A-EL-4001-AU-40006-Rev-P0

GUWAHATI SMART CITY LIMITED

GUWAHATI SMART CITY

BOROSOLA BEEL DEVELOPMENT PROGRAM

SCHEMATIC SLD FOR BOROSOLA BEEL LANDSCAPE AREA AND STP SHEET 2 OF 3

TATA CONSULTING ENGINEERS LIMITED

MUMBAI

SCALE:	DWG. NO.	ISSUE
NTS	TCE.10477A-EL-4001-AU-40006	P0
DC & DISC: PUN-EL		

TCE FORM NO. 090 R0

FILE NAME: F-090-Rev-R0.dwg