BANGALORE WATER SUPPLY AND SEWERAGE BOARD

3rd Floor, Cauvery Bhavan "D" Block,
K.G. Road, Bangalore 560009

Tender for the Work of Design & Construction of Natural Biological System (NBS) to rejuvenate Arakavati river from Hessarghata lake to TG Halli reservoir (**3rd Call) Short Term**

(Through e-Procurement Portal only)

https://www.eproc.karnataka.gov.in

Office of the Chief Engineer (Project)
BANGALORE WATER SUPPLY & SEWERAGE BOARD
3rd Floor, Cauvery Bhavan D-Block,
K.G. Road, Bangalore 560009
Telephone – 080-22945108

TENDER REFERENCE :	:	No.: BWSSB/CE(P)/NBS / 521 /2017-18 DATED : 18-07-2017
NAME OF THE WORK	:	Design & Construction of Natural Biological System (NBS) to rejuvenate Arkavati river from Hessarghata lake to TG Halli reservoir .
LAST DATE AND TIME FOR RECEIPT OF TENDERS	:	28.07.2017 16-00hrs
TIME AND DATE OF OPENING OF TECHNICAL TENDERS	:	31.07.2017 16-00 hrs
PLACE OF OPENING OF TECHINCAL TENDERS	:	Office of the Chief Engineer (Project) Bangalore Water Supply & Sewerage Board 3RD Floor, Cauvery Bhavan D-Block, K.G. Road, Bangalore 560009
TIME AND DATE OF OPENING OF PRICE TENDERS	:	Will be intimated to the qualified tenderers
PLACE OF OPENING OF PRICE TENDER	:	Will be intimated to the qualified tenderers
ADDRESS FOR COMMUNICATION	:	Office of the Chief Engineer (Project) Bangalore Water Supply & Sewerage Board 3RD Floor, Cauvery Bhavan D-Block, K.G. Road, Bangalore 560009

Contents

Section No.	Description	Page
1	INVITATION FOR TENDER (IFT)	4
2	INSTRUCTIONS TO TENDERERS (ITT)	7
3.	QUALIFICATION INFORMATION	19
4.	FORM OF TENDER, LETTER OF ACCEPTANCE, NOTICE TO PROCEED WITH THE WORK AND AGREEMENT FORM	22
5.	CONDITIONS OF CONTRACT (CC)	25
6.	CONTRACT DATA	43
7	SPECIFICATIONS	47
8	DRAWINGS	66
9.	BILL OF QUANTITIES	67
10.	FORMAT OF BANK GUARANTEE FOR SECURITY DEPOSIT	70

BANGALORE WATER SUPPLY AND SEWERAGE BOARD
Office of the Chief Engineer (Project)
3rd Floor, Cauvery Bhavan, K.G. Road, Bangalore-560009

INVITATION FOR TENDER

(ONLY THROUGH E-PROCUREMENT PORTAL)

IFT No.: BWSSB/CE(P)/NBS/ 521 /2017-18 Dt:. 18.07.2017

SECTION 1

INVITATION FOR TENDER 3rd Call, Short Term

1. The Chief Engineer(Project) invites tenders from eligible tenderers for the Work of Design & Construction of Natural Biological System (NBS) to rejuvenate Arkavati river from Hessarghata lake to TG Halli reservoir, , detailed in the table below. Tenderers are requested to submit their tender, EMD and details of their capability to undertake the tender (as detailed in ITT Clause-3 & 6) in the Karnataka e-Procurement Portal. Price tender will be opened only if the Tenderer is found to be qualified to execute the tendered works. Tenderers are advised to note the minimum qualification criteria specified in clause 3 of the Instructions to Tenderers to qualify for award of the contract.

2. Tender documents may be downloaded through e-Procurement Portal www.eproc.karnataka.gov.in website only from 19/07/2017 to 27/07/2017 upto 16-00hrs. Interested Tenderers may obtain further information by accessing the same website.

3. Tenders must be accompanied by Earnest Money Deposit specified for the work in the Table below. EMD will have to be in any one of the forms as specified in the Tender document and shall have to be valid for **45** days beyond the validity of the tender.

4. The last date and time for receipt of tenders in the Electronic Tender Box in website (www.eproc.karnataka.gov.in) is 28.07.2017 up to 16-00 hrs. The technical bids will be opened on 31.07.2017 at 16-00hrs. If the bid-opening day remains as public holiday, bids will be opened on the next working day at the original stipulated time.

5. Other details can be seen in the tender documents.

Sl. No	Name of the work	Tender processing fee	Amount put to tender Rs. (approx)	Bid security Rs. (EMD)	Period of completion	Eligibility criteria during last 5 years (2012-13 2013-14 & 2014-15, 2015-16, 2016-17)	
						Financial Turnover (in all classes of Civil Engg. Construction works) for any of the two years during the last five years Rs.	Performance and work Qualification
(1)	(2)	(3)	(4)	(5)	(6)	(7)	(8)
	Design & Construction of Natural Biological System (NBS) to rejuvenate Arkavati river from Hessarghata lake to TG Halli reservoir	As per e-procurement portal.	**991lakhs**	**15 lakhs**	**8 months**	**1000 lakhs**	The contractor should have satisfactorily completed as prime contractor or should have an association with technology service provider in the last 5 years built NBS of either 3 MLD capacity in single system or totaling to 4 MLD multiple capacities.

6. EMD shall be paid through OTC, NEFT,DEBIT CARD & CREDIT CARD through E –Procurement Portal Only. The value of the Bid Security / EMD is as mentioned in the table above in column no 5.
7. Tenderers can access tender documents from www.eproc.karnataka.gov.in website only and upload the required details; those are mentioned in different sections in the bid document in to electronic tender on the website. Scanned documents those are required to be furnished as per Section 2, 3 & 4 of the bid document shall be submitted through e- Procurement Portal.
8. The Tender processing fee once paid will not be refunded.
9. The successful Tenderer would be required to furnish the performance Bank Guarantee from a Nationalized / Scheduled Indian Bank, with jurisdiction at Bangalore as specified, towards guarantee for completion of work within the stipulated period as mentioned in tender document.

10. Bangalore Water Supply and Sewerage Board (BWSSB) reserve the right to cancel or annul the entire or part of this process of invitation at any time without assigning any reasons.
11. For any additional information regarding the above tender, the firms who are interested to quote, may contact office of the undersigned at the office address given below on all working days during office hours (10:30hours to 17:00 hours).

Bangalore Water Supply & Sewerage Board
Office of Chief Engineer (Project)
3rd Floor, Cauvery Bhavan,
K.G. Road, Bangalore.
Telefax:080-22945108

12. Tenderers shall submit offers that comply with the requirements of the bid document.

14. Corrigendum / Modification / Corrections, if any will be published in the website only.

Sd/-

Chief Engineer (Project)

,

SECTION 2:

INSTRUCTIONS TO TENDERERS (ITT)

Table of Clauses

		Page No.
A.	**General**	
	1. Scope of Tender	5
	2. Eligible Tenderers	5
	3. Qualification of the Tenderer	5
	4. One Tender per Tenderer	6
	5. Cost of Tendering	6
	6. Site Visit	7
B.	**Tender Documents**	
	7. Content of Tender documents	7
	8. Clarification of Tender Document	7
	9. Amendment of Tender documents	7
C.	**Preparation of Tenders**	
	10. Documents comprising the Tender	7
	11. Tender prices	8
	12. Tender validity	8
	13. Earnest money deposit	8
	14. Format and signing of Tender	9
D.	**Submission of Tenders**	
	15. Sealing and marking of Tenders	9
	16. Deadline for submission of Tenders	9
	17. Late Tenders	9
	18. Modification and Withdrawal of Tenders	10
E.	**Tender opening and evaluation**	
	19. Opening of First Cover of all Tenders and evaluation to determine qualified Tenderers	10
	20. Opening of Second Cover Tenders of qualified Tenders and evaluation	10
	21. Process to be confidential	11
	22. Clarification of Tenders	11
	23. Examination of Tenders and determination of responsiveness	11
	24. Correction of errors	11
	25. Evaluation and comparison of Tenders	12
F.	**Award of contract**	
	26. Award criteria	12
	27. Employer's right to accept any Tender and to reject any or all Tenders	12
	28. Notification of award and signing of Agreement	12
	29. Security deposit	13
	30. Advance payment and Security	13
	31 Corrupt or Fraudulent Practices	13

A. General

1. Scope of Tender

1.1 The **Chief Engineer (Project),** (Referred to as Employer in these documents) invites tender for the **Work of Design & Construction of Natural Biological System (NBS) to rejuvenate Arakavati river from Hessarghata lake to TG Halli reservoir** (as defined in these documents and referred to as "the work") detailed in the Table given in the Invitation for Tenders (IFT).

2. **Eligible Tenderers**

2.1 Tenderers shall not be under a declaration of ineligibility for corrupt and fraudulent practices issued by the Government of Karnataka

2.2 Deleted……...

3. Qualification of the Tenderer:

3.1 All Tenderers shall provide the requested information accurately and in sufficient detail in Section 3: Qualification information.

3.2 To qualify for award of this contract, each Tenderer in its name should have in the last five years i.e. 2012-13 to 2016-17)

a) Achieved in at least two financial years a minimum financial turnover of **Rs. 10 Crores.**

b) The contractor should have satisfactorily completed as prime contractor or should have an association with technology service provider in the last 5 years built NBS of either 3 MLD capacity in single system or totaling to 4 MLD multiple capacities,

c) Executed in any one year, the following minimum quantities of work:

1. Cement concrete (RCC Works) - 500 Cum

d) Deleted---

3.3 Each Tenderer should further demonstrate:

a. Availability by owning the following key and critical equipment for this work;
b. Liquid assets and /or availability of credit facilities of no less than Rs. **5 Crores** (Credit lines/letter of credit/certificates from Nationalized / Schedule banks in India for meeting the fund requirement etc.,

3.4 To qualify for a package of contracts made up of this and other contracts for which tenders are invited in this IFT, the tenderer must demonstrate having experience and resources to meet the aggregate of the qualifying criteria for the individual contracts.

3.5 Sub-contractors experience and resources shall not be taken into account in determining the Tenderers compliance with the qualifying criteria except to the extent stated in 3.2 above.

3.6 Tenderers who meet the above specified minimum qualifying criteria, will only be qualified, if their available tender capacity is more than the total tender value. The available tender capacity will be calculated as under:

Assessed available tender capacity = (A*N*1.5 - B)>= ----------

where

A = Maximum value of civil engineering works executed in any one year during the last five years (updated to **2016-17** price level at 10% per year) taking into account the completed as well as works in progress.

N = Number of years prescribed for completion of the works for which tenders are invited.

B = Value, at price level, of existing commitments and on-going works to be completed during the next **2** years (period of completion of the works for which Tenders are invited)*

Note: The statements showing the value of existing commitments and on-going works as well as the stipulated period of completion remaining for each of the works listed should be countersigned by the Employer in charge, not below the rank of an Executive Engineer or equivalent.

3.7 Even though the Tenderers meet the above criteria, they are subject to be disqualified if they have:

- made misleading or false representations in the forms, statements and attachments submitted in proof of the qualification requirements; and/or
- record of poor performance such as abandoning the works, not properly completing the contract, inordinate delays in completion, litigation history, or financial failures etc.; and/or
- participated in the previous Tender for the same work and had quoted unreasonably high tender prices and could not furnish rational justification.

4. One Tender per Tenderer:

4.1 Each tenderer shall submit only one tender for one package. A tenderer who submits or participates in more than one tender (other than as a sub-contractor or in cases of alternatives that have been permitted or requested) will cause all the proposals with the Tenderer's participation to be disqualified.

5. Cost of Tendering:

5.1 The tenderer shall bear all costs associated with the preparation and submission of his tender, and the Employer will in no case be responsible and liable for those costs.

6. Site visit:

6.1 The Tenderer at his own responsibility and risk is encouraged to visit and examine the Site of Works and its surroundings and obtain all information that may be necessary for preparing the Tender and entering into a contract for construction of the Works. The costs of visiting the Site shall be at the Design and Tenderers own expense.

B. Tender documents

7. Content of Tender documents

7.1 Deleted

8. Clarification of Tender Documents

8.1 A prospective tenderer requiring any clarification of the tender documents may notify the Employer by posting in the web site (eprocurement→My tenders→action→quarries). No identity of the participating tenderer shall be mentioned in the quarry. All quarries & replies can be viewed by all participating tenderers.

8.2 Pre-tender meeting: ***Deleted***

9. Amendment of Tender documents

9.1 Before the deadline for submission of tenders, the Employer may modify the tender documents by issuing addenda.

9.2 Any addendum thus issued shall be part of the tender documents and shall be posted in the e-procurement website for viewing by all the purchasers of the tender documents.

9.3 To give prospective Tenderers reasonable time in which to take an addendum into account in preparing their tenders, the Employer shall extend as necessary the deadline for submission of tenders, in accordance with Sub-Clause 16.2 below.

C. Preparation of Tenders

10. Documents comprising the Tender

10.1.1 The tender submitted in e-Procurement Portal by the Tenderer shall contain the documents as follows:

a) Scanned copy of Earnest Money Deposit.

b) The form of Tender (in the format indicated in Section 4)

c) Scanned copies of the certificates supporting the Qualification as in Section 3. Any other materials required to be completed and submitted by Tenderers in accordance with these instructions. The documents listed under Sections 3, 4, 6 and 9 shall be filled in without exception. PHOTOCOPIES OF THE DOCUMENTS SHOULD BE NOTARISED.

10.1.2 Rates for the Bill of Quantities (Section 9) shall be quoted at the provision made in the e-procurement website Portal.

10.2 Tenderers submitting tenders together with other contracts stated in the IFT to form a package will so indicate in the tender together with any discounts offered for the award of more than one contract.

11. Tender prices

11.1 The contract shall be for the whole works as described in Sub-Clause 1.1, based on the priced Bill of Quantities submitted by the Tenderer.

11.2 The Tenderer shall fill in the unit rates in figures for all items of the Works described in the Bill of Quantities. The system will automatically convert the unit rates mentioned in figures to words and also calculate the amount of that item as well as the total Tender value. ***Items for which no rate is entered by the Tenderer will not be paid for by the Employer when executed and shall be deemed covered by the other rates in the Bill of Quantities***

11.3 All duties, taxes, and other levies payable by the contractor under the contract, or for any other cause, shall be included in the rates, prices and total Tender Price submitted by the Tenderer.

11.4 The rates and prices quoted by the Tenderer shall be subject to adjustment during the performance of the Contract in accordance with the provisions of Clause 40 of the Conditions of Contract.

12. Tender validity

12.1 Tenders shall remain valid for a period not less than **ninety days** after the deadline date for tender submission specified in Clause 16. A tender valid for a shorter period shall be rejected by the Employer as non-responsive.

12.2 In exceptional circumstances, prior to expiry of the original time limit, the Employer may request that the Tenderers may extend the period of validity for a specified additional period. The request and the Tenderers responses shall be made in writing or by cable or e-mail. A Tenderer may refuse the request without forfeiting his earnest money deposit. A Tenderer agreeing to the request will not be required or permitted to modify his tender, but will be required to extend the validity of his earnest money deposit for a period of the extension, and in compliance with Clause13 in all respects.

13. Earnest money deposit

13.1 Earnest Money Deposit shall be paid through e-Procurement Portal only using any of the following four modes.

i. Credit Card (Online Payment)

ii. Direct Debit Using Internet Banking (Online Payment)

iii. Remittance at the Bank Counter - Challan (Offline Payment)

iv. NEFT (Offline payment).

13.2 Instruments having fixed validity issued as earnest money deposit for the tender shall be valid for 45 days beyond the validity of the tender.

13.3 Any tender not accompanied by an acceptable earnest money deposit and not secured as indicated in Sub-Clauses 13.1 and 13.2 above shall be rejected by the Employer as non-responsive.

13.4 The earnest money deposit of unsuccessful Tenderers will be returned within 30 days of the end of the tender validity period specified in Sub-Clause 12.1.

13.5 The earnest money deposit of the successful Tenderer will be discharged when the Tenderer has signed the Agreement and furnished the required Performance Security.

13.6 The Earnest money deposit may be forfeited:

(a) if the Tenderer withdraws the Tender after tender opening during the period of tender validity;
(b) if the Tenderer does not accept the correction of the Tender Price, pursuant to Clause 24; or
(c) in the case of a successful Tenderer, if the Tenderer fails within the specified time limit to
(i) sign the Agreement; or
(ii) furnish the required Security deposit

14. Format and signing of Tender

14.1 The completed tender comprising of documents indicated in ITT 10, should be uploaded in the e-Procurement website along with scanned copies of requisite certificates those are mentioned in different sections in the bid document and scanned copy of tender Security / EMD.

14.2 All the documents should be uploaded in e-Procurement website. Tenderer should take a print out of the Form of Tender in the Section 4 of the tender document on company letter head and should sign, stamp and upload the same to the tender. Authenticity of the singing authority shall be furnished. With this, it is taken that tenderer has signed & submitted the tender.

14.3 The Tender shall contain no alterations or additions, except those to comply with instructions issued by the Employer, or as necessary to correct errors made by the Tenderer, in which case such corrections shall be initialed by the person signing the Tender.

D. Submission of Tenders

15. Up-loading & submission of tenders

15.1 The tenders should be uploaded only through e-Procurement Website. Tender should contain

A. Technical Tender consisting of following:

a. All the documents with required details in prescribed format; those are mentioned in different sections in the Tender. Form of Tender, etc., shall be downloaded, filled with required details, signed, scanned & uploaded to the e-Procurement Portal (www.eproc.karnataka.gov.in)

b. The above documents along with notarized copies of documentary evidences as indicated in Section—2 of ITT, Section-3 Qualification information & Section-4 Forms of Tender shall be scanned and uploaded to the website compulsorily, failing which tender will be rejected in view of incomplete tender document and

B. Financial Tender consisting of Bill of Quantities

All rates for the items in the Schedule shall be posted in the work template provided in the tender document. Rates shall be entered in figures only and rates in words will be automatically generated.

15.2 Deleted

15.3 BID reference Number will be automatically generated by the server.

15.4 Deleted

16. Deadline for submission of the Tenders

16.1 Deleted.

16.2 The Employer may extend the deadline for submission of tenders by issuing an amendment in accordance with Clause 9, in which case all rights and obligations of the Employer and the Tenderers previously subject to the original deadline will then be subject to the new deadline.

17. Late Tenders

17.1 The software of e-Procurement website system will not allow the Tenderer to upload the documents after expiration of the stipulated date & time of Bid submission. The Tenderer shall refer the server time, which will be displayed in the e-Procurement Portal. BWSSB will not be responsible for non-receipt of bids on the stipulated date & time prescribed in clause 16, due to Internet Problems, improper uploading or any other related problems. In case of connectivity problems, Tenderer may contact Helpdesk of the e-Procurement Portal service provider and may also draw the attention of tender inviting authority.

18. Modification and Withdrawal of Tenders

18.1 Tenderers may "modify" and "withdraw" their tenders multiple numbers of times, until the deadline for submission of tenders by operating the relevant provision made in e-Procurement Portal. If the Tenderer withdraws the tender before the deadline for submission of tenders and later if he is interested to submit the tender once again, may do so within the stipulated date & time as mentioned in Clause 16. In this case within the stipulated date & time, the tenderer can once again submit the requisition to the officer inviting tenders for access to the withdrawn tender document for resubmission. For this tenderer need not make any additional payment towards the cost of tender document. Communication of modification / withdrawal by other means will not be accepted.

18.2 Deleted.

18.3 No Tender may be modified after the deadline for submission of Tenders.

18.4 Withdrawal or modification of a Tender between the deadline for submission of Tenders and the expiration of the original period of Tender validity specified in Clause 12.1 above or as extended pursuant to Clause

12.2 may result in the forfeiture of the earnest money deposit pursuant to Clause 13.

18.5 Tenderers may offer discounts for individual items by simply modifying the quoted unit price in the Bill of Quantities. Also, Tenderer may enter their overall discount, at specified location in the Bill of Quantities only, by submitting tender modifications in accordance with this clause. Communication of discount by other means will not be accepted.

E. Tender opening and evaluation

19. Opening of Technical Bid of Tenders and evaluation to determine qualified Tenderers:

19.1 The Employer will open the Technical details of all the Tenders received (except those withdrawn), including modifications made pursuant to Clause 18, in the presence of the Tenderers or their representatives who choose to attend at the Employer's office mentioned in the earlier para at 15:00 hours on the date and the place specified. In the event of the specified date of Tender opening being declared a holiday for the Employer, the Tenders will be opened at the appointed time and location on the next working day.

19.2 WITHDRAWAL proposal submitted pursuant to clause 18 shall be read out first and their bids shall not be opened.

19.3 The Tenderers names, the presence or absence of earnest money deposit (amount, format and validity), the submission of qualification information and such other information as the Employer may consider appropriate will be announced by the Employer at the opening.

19.4 The Employer shall prepare minutes of the Tender opening, including the information disclosed to those present in accordance with Sub-Clause 19.3.

19.5 The Price Tenders of all the Tenderers including modifications for financial tenders cannot be opened as this is programmed to open later after evaluation of the Technical details of the participating Tenderers.

19.6 The Employer will evaluate and determine whether each tender (a) meets the eligibility criteria defined in ITT Clause 2; (b) is accompanied by the required earnest money deposit as per stipulations in ITT Clause and (c) meets the minimum qualification criteria stipulated in ITT Clause 3. The Employer will draw out a list of qualified Tenderers.

20. Opening of Financial Bid of qualified Tenderers and evaluation:

20.1 The Employer will inform all the Qualified Tenderers the time, date and venue fixed for the opening of the price Tenders. The Employer will open the price tender of Qualified Tenderers at the appointed time and date in the presence of the Tenders or their representatives who choose to attend. In the event of the specified date of Price tender opening being declared a holiday for the Employer, the price tenders will be opened at the appointed time and location on the next working day.

20.2 Deleted.

20.3 The Tenderers' names, the Tender prices, the total amount of each Tender, any discounts, and withdrawals, and such other details as the Employer may consider appropriate, will be announced by the Employer at the opening. No Tender shall be rejected at Tender opening.

20.4 The Employer shall prepare minutes of the Price Tender opening, including the information disclosed to those present in accordance with Sub-Clause 20.3.

21. Process to be confidential

21.1 Information relating to the examination, clarification, evaluation, and comparison of Tenders and recommendations for the award of a contract shall not be disclosed to Tenderers or any other persons not officially concerned with such process until the award to the successful Tenderer has been announced. Any effort by a Tenderer to influence the Employer's processing of Tenders or award decisions may result in the rejection of his Tender.

22. Clarification of Tenders

22.1 To assist in the examination, evaluation, and comparison of Tenders, the Employer may, at his discretion, ask any Tenderer for clarification of his Tender, including breakdowns of unit rates. The request for clarification and the response shall be in writing or by cable, but no change in the price or substance of the Tender shall be sought, offered, or permitted except as required to confirm the correction of arithmetic errors discovered by the Employer in the evaluation of the Tenders in accordance with Clause 24.

22.2 Subject to sub-clause 22.1, no Tenderer shall contact the Employer on any matter relating to its Tender from the time of the Tender opening to the time the contract is awarded. If the Tenderer wishes to bring additional information to the notice of the Employer, it should do so in writing.

22.3 Any effort by the Tenderer to influence the Employer in the Employer's Tender evaluation, Tender comparison or contract award decisions may result in the rejection of the Tenderers' Tender.

23. Examination of Tenders and determination of responsiveness

23.1 Prior to the detailed evaluation of Tenders, the Employer will determine whether each Tender; (a) has been properly signed; and; (b) is substantially responsive to the requirements of the Tender documents like (a)Form of Tender, (b)Declaration statement Scanned/ uploaded [including documents those are required to be furnished as per Section 2, 3 & 4 of the tender,]; (c) is accompanied by the required securities and; (d) is substantially responsive to the requirements of the tendering documents.

23.2 A substantially responsive Tender is one which conforms to all the terms, conditions, and specifications of the Tender documents, without material deviation or reservation. A material deviation or reservation is one (a) which affects in any substantial way the scope, quality, or performance of the Works; (b) which limits in any substantial way, inconsistent with the Tender documents, the Employer's rights or the Tenderer's obligations under the Contract; or (c) whose

rectification would affect unfairly the competitive position of other Tenderers presenting substantially responsive Tenders.

23.3 If a Tender is not substantially responsive, it will be rejected by the Employer, and may not subsequently be made responsive by correction or withdrawal of the non conforming deviation or reservation.

24. Correction of errors

24.1 (a) Once the Tenderer key in the rates in figures, in the Bill of quantities provided, the system will automatically calculate the amount of that item as well as the total Bid value.

24.2 Deleted

25. Evaluation and comparison of Tenders

25.1 The Employer will evaluate and compare only the Tenders determined to be substantially responsive in accordance with Clause 23.

25.2 In evaluating the Tenders, the Employer will determine for each Tender the evaluated Tender Price by adjusting the Tender Price as follows:

(a) making any correction for errors pursuant to Clause 24; and

(b) making appropriate adjustments to reflect discounts or other price modifications offered in accordance with Sub Clause 18.5.

25.3 The Employer reserves the right to accept or reject any variation, deviation, or alternative offer. Variations, deviations, and alternative offers and other factors which are in excess of the requirements of the Tender documents or otherwise result in unsolicited benefits for the Employer shall not be taken into account in Tender evaluation.

25.4 The estimated effect of the price adjustment conditions under Clause 41 of the Conditions of Contract, during the implementation of the Contract, will not be taken into account in tender Evaluation

25.5 If the tender of the successful tenderer is seriously unbalanced in relation to the Employer's estimate of the cost of the work to be performed under the contract, the Employer may require the Tenderer to produce detailed price analyses for any or all items of the Bill of Quantities, to demonstrate the internal consistency of those prices with the construction methods and schedule proposed. After evaluation of the price analyses, the Employer may require that the amount of the performance security set forth in Clause 29 be increased at the expense of the successful Tenderer to a level sufficient to protect the Employer against financial loss in the event of default of the successful under the contract.

F. Award of Contract

26. Award criteria

26.1 Subject to Clause 27, the Employer will award the Contract to the Tenderer whose Tender has been determined to be substantially responsive to the

Tender documents and who has offered the lowest evaluated Tender Price, provided that such Tenderer has been determined to be (a) eligible in accordance with the provisions of Clause 2, and (b) qualified in accordance with the provisions of Clause 3.

27. Employer's right to accept any Tender and to reject any or all Tenders

27.1 Notwithstanding Clause 26, the Employer reserves the right to accept or reject any Tender, and to cancel the Tender process and reject all Tenders, at any time prior to the award of Contract, without thereby incurring any liability to the affected Tenderer or Tenderers or any obligation to inform the affected Tenderer or Tenderers of the grounds for the Employer's action.

28. Notification of award and signing of Agreement

28.1 The Tenderer whose Tender has been accepted will be notified of the award by the Employer prior to expiration of the Tender validity period by cable, telex, e-mail or facsimile confirmed by registered letter. This letter (hereinafter and in the Conditions of Contract called the "Letter of Acceptance") will state the sum that the Employer will pay the Contractor in consideration of the execution, completion, and maintenance of the Works by the Contractor as prescribed by the Contract (hereinafter and in the Contract called the "Contract Price").

28.2 The notification of award will constitute the formation of the Contract, subject only to the furnishing of Security deposit in accordance with the provisions of Clause 29.

28.3 The Agreement will incorporate all agreements between the Employer and the successful Tenderer. It will be kept ready for signature of the successful Tenderer in the office of Employer within 30 days following the notification of award along with the Letter of Acceptance. Within 20 days of receipt, the successful Tenderer will sign the Agreement and deliver it to the Employer.

28.4 Upon the furnishing by the successful Tenderer of the Performance Security, the Employer will promptly notify the other Tenderers that their Tenders have been unsuccessful.

29. Security deposit

29.1 Within 20 days of receipt of the Letter of Acceptance, the successful Tenderer shall deliver to the Employer a Security deposit in any of the forms given below for an amount equivalent to 5% of the Contract price plus additional security for unbalanced tenders in accordance with Clause 25.5 of ITT and Clause 44 of the Conditions of Contract. :

- A bank guarantee in the form given in Section 10;

29.2 If the security deposit is provided by the successful Tenderer in the form of a Bank Guarantee, it shall be issued either by a Nationalized/Scheduled bank and valid in accordance with Clause 43 of Condition of Contract.

29.3 The security deposit if furnished in cash or demand draft can, if requested, be converted to interest bearing securities at the cost of the contractor.

29.4 Failure of the successful Tenderer to comply with the requirements of Sub-Clause 29.1 shall constitute sufficient grounds for cancellation of the award and forfeiture of the Earnest money deposit.

30 Advance Payment and Security:

30.1 The Employer will provide an advance payment on the contract price as stipulated in the Conditions of Contract, subject to the maximum amount as stated in the Contract Data.

31. Corrupt or Fraudulent practices

31.1 The GOK requires that the Tenderers/Suppliers/Contractors, observe the highest standard of ethics during the procurement and execution of such contracts. In pursuance of this policy, GOK :

(a) will reject a proposal for award if it determines that the Tenderer recommended for award has engaged in corrupt or fraudulent practices in competing for the contract in question;

(b) will declare a firm ineligible, either indefinitely or for a stated period of time, to be awarded a GOK contract if it at any time determines that the firm has engaged in corrupt or fraudulent practices in competing for, or in executing, a GOK contract.

31.2 Furthermore, Tenderers shall be aware of the provision stated in sub-clause 50.2 of the Conditions of Contract.

Chief Engineer (Project)

SECTION 3:

QUALIFICATION INFORMATION

The following form is to be downloaded, particulars are to be filled, scanned & uploaded by the Tenderer.

The information to be filled in by the Tenderer hereunder will be used for purposes of computing Tender capacity as provided for in Clause 3 of the Instructions to Tenderers. This information will not be incorporated in the Contract.

1.1 Constitution or legal status of Tenderer [Attach copy]

Place of Registration _____

(Attach Copy)

Principal place of business: _____

1.2 Total value of civil engineering construction works executed and payments received in the last five years (in Rs. Lakh) [attach certificate of Chartered accountant]

2012 – 13 _____
2013 – 14 _____
2014 – 15 _____
2015 – 16 _____
2016 – 17 _____

1.3 Work performed as Prime Contractor (in the same name) on works of similar nature over during the five years specified in 1.2 above.

Project Name	Name of Employer	Description of Work	Contract Number	Value of contract Rs. Lakh	Date of issue of work order	Specified period of completion	Actual date of completion	Remarks explaining reasons for delay in completion of work
1	2	3	4	5	6	7	8	9

1.4 Quantities of work executed as prime contractor (in the same name) during the last five years specified in 1.2 above: [to support the qualification criteria in ITT clause 3]

Year	Name of Work	Name of Employer	Quantity of work performed (cum)		Remarks (Indicate contract reference)
			Reinforced Cement Concrete	Masonary (BBM/ CC Solid Blocks)	
2012 – 13					
2013 – 14					
2014 – 15					
2015 – 16					
2016 – 17					

1.5 Information on works for which Tenders have been submitted and works which are yet to be completed as on the date of this Tender.

(A) Existing commitments and on-going works:

Description of Work	Place & State	Contract No. & Date	Name and Address of Employer	Value of Contract (Rs. Lakh)	Stipulated period of completion	Value of works remaining to be completed (Rs. Lakh)	Anticipated date of completion
1	2	3	4	5	6	7	8

(B) Works for which Tenders already submitted:

Description of Work	Place & State	Name and Address of Employer	Estimated value of works (Rs. Lakh)	Stipulated Date period of completion	when decision is expected	Remarks if any
1	2	3	4	5	6	7

1.6. The following items of equipment are considered essential for successfully carrying out the works. The Tenderer should furnish all the information listed below.

Item of Equipment	Requirement			Owned and available		Remarks
	No.	Capacity	Owned	Number/ Capacity	Age/ Condition	

1.7 Reports on the financial standing of the tenderer, such as profit and loss statements and auditor's reports for the last five years;

1.8 Qualification and experience of the key technical and management personnel in permanent employment with the tenderer and those that are proposed to be deployed on this contract, if awarded.

1.9. Name, address, and telephone, telex, and fax numbers of the Tenderers' bankers who may provide references if contacted by the Employer.

1.10 Evidence of access to financial resources to meet the qualification requirement specified in ITT Clause3.3 (b): Cash in hand, Letter of Credit etc. List them below and attach certificate from the Banker in the suggested format as under:

BANKER'S CERTIFICATE

This is to certify that M/s. …….. is a reputed company with a good financial standing. If the contract for this work, namely …… (name of the work) is awarded to the above firm, we shall be able to provide overdraft/credit facilities to the extent of Rs. …… to meet the working capital requirements for executing the above contract

Sd/-
Name of the Bank, Senior Bank Manger
Address:……

1.11 Proposals for subcontracting components of works amounting to more than 20% of the contract price .

Item of Work	Value of Sub-Contract	Identified Sub-Contractor (Name and address)	Experience of similar work

1.12 Information on litigations in which the Tenderer is involved:

Other Party (ies)	Employer	Details of dispute	Amount involved	Remarks showing present status

1.13 The proposed methodology and program of construction, backed with equipment planning and deployment, duly supported with broad calculations and quality control procedures proposed to be adopted, justifying their capability of execution and completion of the work as per technical specifications within the stipulated period of completion as per milestones.

Chief Engineer
(Project)

SECTION 4:

[This letter to be reproduced in the firm's letter head duly signed by authorized signatory]

FORMS OF TENDER, LETTER OF ACCEPTANCE, NOTICE TO PROCEED WITH THE WORK AND AGREEMENT FORM

Form of Tender

Description of the Work: Design & Construction of Natural Biological System (NBS) to rejuvenate Arkavati river from Hessarghata lake to TG Halli reservoir 2nd Call, Short Term

To,

The Chief Engineer (Project)
Bangalore Water Supply & Sewerage Board
3rd Floor, Cauvery Bhavan D-Block,
K.G. Road, Bangalore 560009

GENTLEMEN,

We offer to execute the Works described above in accordance with the Conditions of Contract accompanying this Tender for the Contract Price uploaded for this tender to be opened after qualification.

This Tender and your written acceptance of it shall constitute a binding contract between us. We understand that you are not bound to accept the lowest or any Tender you receive.

We undertake that, in competing for (and, if the award is made to us, in executing) the above contract, we will strictly observe the laws against fraud and corruption in force in India namely "Prevention of Corruption Act 1988".

We hereby confirm that this Tender complies with the Tender validity and Earnest money deposit required by the Tender documents.

We attach herewith our current income-tax clearance certificate.

Yours faithfully,

Authorized Signature:

Name & Title of Signatory:

_____

Name of Tenderer _____

Address: ----------

Letter of Acceptance
(letterhead paper of the Employer)

_____[date]

To: _____[name and address of the Contractor]

Dear Sirs,

This is to notify you that your Tender dated _____ for execution of the _____[name of the contract and identification number, as given in the Instructions to Tenderers] for the Contract Price of Rupees _____ –– _____ (_____) [amount in words and figures], as corrected and modified in accordance with the Instructions to Tenderers is hereby accepted by our Agency.

You are hereby requested to furnish Security deposit plus additional security for unbalanced tenders in terms of Clause 25.5 of ITT, in the form detailed in Clause 29.1 of ITT for an amount of Rs.————— within 20 days of the receipt of this letter of acceptance valid up to 30 days from the date of expiry of Defects Liability Period i.e. up to ..... and sign the contract, failing which action as stated in Para 29.4 of ITT will be taken.

Yours faithfully,

Authorized Signature
Name and Title of Signatory
Name of Agency

Issue of Notice to proceed with the work
(letterhead of the Employer)

————— (date)

To
————————————— (name and address of the Contractor)
————————————————
————————————————

Dear Sirs:

Pursuant to your furnishing the requisite security deposit as stipulated in ITT Clause 29.1 and signing of the contract agreement for the construction of ———————[name of the contract] a Tender Price of Rs.———————, you are hereby instructed to proceed with the execution of the said works in accordance with the contract documents.

Yours faithfully,

(Signature, name and title of signatory authorized to sign on behalf of Employer)

Agreement Form
Agreement

This agreement, made the _____day of _____20_____, between_____ _____[name and address of Employer] (hereinafter called "the Employer") of the one part and _____ _____ _____ __ _____[name and address of contractor] (hereinafter called "the Contractor") of the other part.

Whereas the Employer is desirous that the Contractor execute _____ _____ _____ _____[name and identification number of Contract] (hereinafter called "the Works") and the Employer has accepted the Tender by the Contractor for the execution and completion of such Works and the remedying of any defects therein at a contract price of Rupees.....

NOW THIS AGREEMENT WITNESSETH as follows:

1. In this Agreement, words and expression shall have the same meanings as are respectively assigned to them in the Conditions of Contract hereinafter referred to, and they shall be n
2. In consideration of the payments to be made by the Employer to the Contractor as hereinafter mentioned, the Contractor hereby covenants with the Employer to execute and complete the Works and remedy any defects therein in conformity in all aspects with the provisions of the Contract.
3. The Employer hereby covenants to pay the Contractor in consideration of the execution and completion of the Works and the remedying the defects wherein the Contract Price or such other sum as may become payable under the provisions of the Contract at the times and in the manner prescribed by the Contract.
4. The following documents shall be deemed to form and be read and construed as part of this Agreement, viz:
   - i) Letter of Acceptance;
   - ii) Notice to proceed with the works;
   - iii) Contractor's Tender;
   - iv) Contract Data;
   - v) Conditions of contract (including Special Conditions of Contract);
   - vi) Specifications;
   - vii) Drawings;
   - viii) Bill of Quantities; and
   - ix) Any other document listed in the Contract Data as forming part of the contract.

In witness whereof the parties thereto have caused this Agreement to be executed the day and year first before written.

The Common Seal of _____
was hereunto affixed in the presence of:
Signed, Sealed and Delivered by the said _____
_____

in the presence of:
Binding Signature of Employer _____
Binding Signature of Contractor _____

SECTION 5: CONDITIONS OF CONTRACT

Table of Contents

		Page No.
A.	**General**	
1.	Definitions	21
2.	Interpretation	21
3.	Law governing contract	22
4.	Employers decisions	22
5.	Delegation	22
6.	Communications	22
7.	Subcontracting	22
8.	Other Contractors	22
9.	Personnel	22
10.	Employer's and Contractor's risks	22
11.	Employer's risks	22
12	Contractor's risks	23
13.	Insurance	23
14.	Site Investigation Report	23
15	Query about Contract Data	23
16	Contractor to construct the Works	23
17.	The Works to be completed by Intended Completion Date	23
18	Approvals by the Employer	24
19.	Safety	24
20.	Discoveries	24
21.	Possession of the Site	24
22.	Access to the Site	24
23.	Instructions	24
24.	Procedure for resolution of disputes	24
B.	**Time Control**	
25.	Program	24
26.	Extension of the Intended Completion Date	25
27.	Delays ordered by the Employer	25
28.	Management meetings	25
C.	**Quality Control**	
29.	Identifying defects	25
30.	Tests	25
31.	Correction of defects	25
32.	Uncorrected defects	25
D.	**Cost Control**	
33	Bill of Quantities (BOQ)	26
34	Variations	26
35.	Payment for Variations	26
36.	Submission of bills for payment	27
37	Payments	27

	38.	Compensation events	27
	39.	Tax	27
	40	Price Adjustment	27
	41.	Liquidated damages	28
	42.	Advance Payments	28
	43.	Securities	28
	44.	Cost of repairs	29
E	**Finishing of Contract**		
	45.	Completion	29
	46.	Taking Over	29
	47.	Final account	29
	48.	As built drawings and/or Operating and Maintenance Manuals	29
	49.	Termination	29
	50	Payment upon termination	30
	51.	Property	30
	52.	Release from performance	30
F	**Special Conditions of Contract**		**31**

Conditions of Contract

A. General

1. Definitions

1.1 Terms which are defined in the Contract Data are not also defined in the Conditions of Contract but keep their defined meanings. Bold letters are used to identify defined terms.

Bill of Quantities means the priced and completed Bill of Quantities forming part of the Tender.

Compensation events are those defined in Clause 38 hereunder.

The **Completion Date** is the date of completion of the Works as certified by the Employer in accordance with Sub Clause 46.1.

The **Contract** is the contract between the Employer and the Contractor to execute, complete and maintain the Works. It consists of the documents listed in Clause 2.2 below.

The **Contract Data** defines the documents and other information which comprise the Contract.

The **Contractor** is a person or corporate body whose Tender to carry out the Works has been accepted by the Employer.

The **Contractor's Tender** is the completed Tender document submitted by the Contractor to the Employer.

The **Contract price** is the price stated in the Letter of Acceptance and thereafter as adjusted in accordance with the provisions of the Contract.

Days are calendar days; months are calendar months.

A **Defect** is any part of the Works not completed in accordance with the Contract.

The **Defects liability period** is the period named in the Contract Data and calculated from the Completion Date.

The **Employer** is the party who will employ the Contractor to carry out the Works.

Equipment is the Contractor's machinery and vehicles brought temporarily to the Site to construct the Works.

The **Initial Contract price** is the Contract Price listed in the Employer's Letter of Acceptance.

The **Intended Completion Date** is the date on which it is intended that the Contractor shall complete the Works. The Intended Completion Date is specified in the Contract Data. The Intended Completion Date may be revised only by the Employer by issuing an extension of time.

Materials are all supplies, including consumables, used by the contractor for incorporation in the Works.

Plant is any integral part of the Works which is to have a mechanical, electrical, electronic or chemical or biological function.

The **Site** is the area defined as such in the Contract Data.

Specification means the Specification of the Works included in the Contract and any modification or addition made or approved by the Employer.

The **Start Date** is given in the Contract Data. It is the date when the Contractor shall commence execution of the works. It does not necessarily coincide with any of the Site Possession Dates.

A **Subcontractor** is a person or corporate body who has a Contract with the Contractor to carry out a part of the work in the Contract which includes work on the Site.

A **Variation** is an instruction given by the Employer which varies the Works.

The **Works** are what the Contract requires the Contractor to construct, install, and turn over to the Employer, as defined in the Contract Data.

2. Interpretation

2.1 In interpreting these Conditions of Contract, singular also means plural, male also means female or neuter, and the other way around. Headings have no significance. Words have their normal meaning under the language of the Contract unless specifically defined. The Employer will provide instructions clarifying queries about the Conditions of Contract.

2.2 The documents forming the Contract shall be interpreted in the following order of priority:

(1) Agreement
(2) Letter of Acceptance, notice to proceed with the works
(3) Contractor's Tender
(4) Contract Data
(5) Conditions of Contract
(6) Specifications
(7) Drawings
(8) Bill of quantities and
(9) any other document listed in the Contract Data as forming part of the Contract.

3. Law governing contract

3.1 The law governing the Contract is the Laws of India supplanted by the Karnataka Local Acts.

4. Employer's decisions

4.1 Except where otherwise specifically stated, the Employer will decide contractual matters between the Employer and the Contractor .

5. Delegation

5.1 The Employer may delegate any of his duties and responsibilities to other people after notifying the Contractor and may cancel any delegation after notifying the Contractor.

6. Communications

6.1 Communications between parties which are referred to in the conditions are effective only when in writing. A notice shall be effective only when it is delivered (in terms of Indian Contract Act).

7. Subcontracting

7.1 The Contractor may subcontract with the approval of the Employer but may not assign the Contract without the approval of the Employer in writing. Subcontracting does not alter the Contractor's obligations.

8. Other Contractors

8.1 The Contractor shall cooperate and share the Site with other contractors, public authorities, utilities, and the Employer.

9. Personnel

9.1 The Contractor shall employ the technical personnel (of number and qualifications) as may be stipulated by GOK from time to time during the execution of the work. The technical staff so employed shall be available at site as may be stipulated by the Employer.

9.2 If the Employer asks the Contractor to remove a person who is a member of the Contractor's staff or his work force stating the reasons, the Contractor shall ensure that the person leaves the Site within seven days and has no further connection with the work in the Contract.

10. Employer's and Contractor's risks

10.1 The Employer carries the risks which this Contract states are Employer's risks, and the Contractor carries the risks which this Contract states are Contractor's risks.

11. Employer's risks

11.1 The Employer is responsible for the excepted risks which are:

(a) rebellion, riot commotion or disorder unless solely restricted to employees of the Contractor or his Sub-Contractors arising from the conduct of the Works; or

(b) a cause due solely to the design of the Works, other than the Contractor's design; or

(c) any operation of the forces of nature (in so far as it occurs on the Site) which an experienced contractor:

(i) could not have reasonably foreseen; or
(ii) could reasonably have foreseen, but against which he could not reasonably have taken at least one of the following measures;
  (A) prevent loss or damage to physical property from occurring by taking appropriate measures or
  (B) insure against such loss or damage

12. Contractor's risks

12.1 All risks of loss of or damage to physical property and of personal injury and death which arise during and in consequence of the performance of the Contract other than the excepted risks are the responsibility of the Contractor.

13. Insurance:

13.1 The Contractor shall prior to commencing the works, effect and thereafter maintain insurances , in the joint names of the Employer and the Contractor, (cover from the first working day after the Start Date to the end of Defects Liability Period), in the amounts stated in the Contract Data :
(a) for loss of or damage to the Works, Plants and Materials and the Contractor's equipment;
(b) for liability of both Parties for loss, damage, death and injury to third parties or their property arising out of the Contractor's performance of the Contract including the Contractor's liability for damage to the Employer's property other than the Works and
(c) for liability of both Parties and of any Employer's representative for death and injury to the Contractor's personnel except to the extent that liability arises from the negligence of the Employer, any Employer's representative or their Employees.

13.2 Policies and certificates for insurance shall be delivered by the Contractor to the Employer for his approval before the Start Date. All such insurance shall provide for compensation to be payable to rectify the loss or damage incurred. All payments received from insurers relating to loss or damage shall be held jointly by the Parties and used for the repair of the loss or damage or as compensation for loss or damage that is not to be repaired.

13.3 If the Contractor fails to effect or keep in force any of the insurances referred to in the previous sub-clauses or fails to provide satisfactory evidence, policies or receipts, the Employer may without prejudice to any other right or remedy, effect insurance for the cover relevant to such default and pay the premiums due and recover the same as a deduction from any other monies due to the Contractor. If no payments is due, the payment of the premiums shall be a debt due.

13.4 Alterations to the terms of an insurance shall not be made without the approval of the Employer.

13.5 Both Parties shall comply with any conditions of the insurance policies.

14. Site Investigation Reports:

14.1 The Contractor, in preparing the tender, shall rely on any site investigation reports referred to in the Contract data, supplemented by any information available to the Tenderer.

15. Queries about the Contract Data

15.1 The Employer will clarify queries on the Contract Data.

16. Contractor to construct the Works

16.1 The Contractor shall construct the Works in accordance with the Specification and Drawings.

17. The Works to be completed by the Intended Completion Date

17.1 The Contractor may commence execution of the Works on the Start Date and shall carry out the Works in accordance with the program submitted by the Contractor, as updated with the approval of the Employer, and complete them by the Intended Completion Date.

18. Approval by the Employer:

18.1 The Contractor shall submit Specification and drawings showing the proposed Temporary Works to the Employer, who is to approve them if they comply with the Specifications and Drawings.

18.2 The Contractor shall be responsible for the design of Temporary Works

18.3 The Employer's approval shall not alter the Contractor's responsibility for design of the Temporary Works.

18.4 The Contractor shall obtain approval of third parties to the design of third parties to the design of the temporary Works where required.

18.5 All Drawings prepared by the Contractor for the execution of the temporary or permanent Works, are subject to prior approval by the Employer before their use.

19. Safety

19.1 The Contractor shall be responsible for the safety of all activities on the Site.

20. Discoveries

20.1 Anything of historical or other interest or of significant value unexpectedly discovered on the Site is the property of the Employer. The Contractor is to notify the Employer of such discoveries and carry out the Employer's instructions for dealing with them.

21. Possession of the Site

21.1 The Employer shall give possession of all parts of the Site to the Contractor. If possession of a part is not given by the date stated in the Contract Data the Employer is deemed to have delayed the start of the relevant activities and this will be Compensation Event.

22. Access to the Site

22.1 The Contractor shall allow the Employer and any person authorized by the Employer access to the Site, to any place where work in connection with the Contract is being carried out or is intended to be carried out and to any place where materials or plant are being manufactured / fabricated / assembled for the works.

23. Instructions

23.1 The Contractor shall carry out all instructions of the Employer which comply with the applicable laws where the Site is located.

24. Procedure for resolution of Disputes:

24.1 If the Contractor is not satisfied with the decision taken by the Employer, the dispute shall be referred by either party to Arbitration within 30 days of the notification of the Employer's decision.

24.2 If neither party refers the dispute to Arbitration within the above 30 days, the Employer's decision will be final and binding.

24.3 The Arbitration shall be conducted in accordance with the arbitration procedure stated in the Special Conditions of Contract.

B. Time Control

25. Program

25.1 Within the time stated in the Contract Data the Contractor shall submit to the Employer for approval a Program showing the general methods, arrangements, order, and timing for all the activities in the Works.

25.2 The Employer's approval of the Program shall not alter the Contractor's obligations. The Contractor may revise the Program and submit it to the Employer again at any time. A revised Program is to show the effect of Variations and Compensation Events.

26. Extension of the Intended Completion Date

26.1 The Employer shall extend the Intended Completion Date if a Compensation Event occurs or a Variation is issued which makes it impossible for Completion to be achieved by the Intended Completion Date.

26.2 The Employer shall decide whether and by how much to extend the Intended Completion Date within 21 days of the Contractor asking the Employer for a decision upon the effect of a Compensation Event or Variation and submitting full supporting information.

27. Delays ordered by the Employer

27.1 The Employer may instruct the Contractor to delay the start or progress of any activity within the Works.

28. Management meetings

28.1 The Employer may require the Contractor to attend a management meeting. The business of a management meeting shall be to review the progress achieved and the plans for remaining work.

28.2 The responsibility of the parties for actions to be taken is to be decided by the Employer either at the management meeting or after the management meeting and stated in writing to be distributed to all who attended the meeting.

C. Quality Control

29. Identifying defects

29.1 The Employer shall check the Contractor's work and notify the Contractor of any Defects that are found. Such checking shall not affect the Contractor's responsibilities. The Employer may instruct the Contractor to search for a Defect and to uncover and test any work that the Employer considers may have a Defect

30. Tests

30.1 If the Employer instructs the Contractor to carry out a test not specified in the Specification to check whether any work has a Defect and the test shows that it does, the Contractor shall pay for the test and any samples. If there is no Defect the test shall be a Compensation Event.

31. Correction of defects

31.1 The Employer shall give notice to the Contractor of any Defects before the end of the Defects Liability Period, which begins at Completion and is defined in the Contract Data. The Defects Liability Period shall be extended for as long as Defects remain to be corrected.

31.2 Every time notice of a Defect is given, the Contractor shall correct the notified Defect within the length of time specified by the Employer's notice.

32. Uncorrected defects

32.1 If the Contractor has not corrected a Defect within the time specified in the Employer's notice, the Employer will assess the cost of having the Defect corrected, and the Contractor will pay this amount.

D. Cost Control

33. Bill of Quantities (BOQ)

33.1 The BOQ shall contain items for the construction, installation, testing, and commissioning work to be done by the Contractor.

33.2 The BOQ is used to calculate the Contract Price. The Contractor is paid for the quantity of the work done at the rate in the BOQ for each item

34. Variations

34.1 The Employer shall have power to order the Contractor to do any or all of the following as considered necessary or advisable during the progress of the work by him

(a) Increase or decrease of any item of work included in the Bill of Quantities (BOQ);
(b) Omit any item of work;
(c) Change the character or quality or kind of any item of work;
(d) Change the levels, lines, positions and dimensions of any part of the work;
(e) Execute additional items of work of any kind necessary for the completion of the works; and
(f) Change in any specified sequence, methods or timing of construction of any part of the work.

34.2 The Contractor shall be bound to carry out the work in accordance with any instructions in this connection, which may be given to him in writing by the Employer and such alteration shall not vitiate or invalidate the contract.

34.3 Variations shall not be made by the Contractor without an order in writing by the Employer, provided that no order in writing shall be required for increase or decrease in the quantity of an item appearing in the BOQ so long as the work executed conforms to the approved drawings.

34.4 The Contractor shall promptly request in writing the Employer to confirm verbal orders and if no such confirmation is received within 15days of request, it shall be deemed to be an order in writing by the Employer.

35. Payments for Variations

35.1 Payment for increase in the quantities of an item in the BOQ up to 25% of that provided in the Bill of Quantities shall be made at the rates quoted by the Contractor.

35.2 For quantities in excess of 125% of the tendered quantity of an item as given in the BOQ, the Contractor shall be paid at the rate entered in or derived from in the Schedule of Rates (applicable for the area of the work and current at the time of award of contract) plus or minus the overall percentage of the original tendered rates over the current Schedule of Rates prevalent at the time of award of contract.

35.3 If there is no rate for the additional, substituted or altered item of the work in the BOQ, efforts would be made to derive the rates from those given in the BOQ or

the Schedule of Rates (applicable for the area of the work and current at the time of award of contract) and if found feasible the payment would be made at the derived rate for the item plus or minus the overall percentage of the original tendered rates over the current Schedule of Rates prevalent at the time of award of contract

35.4 If the rates for additional, substituted or altered item of work cannot be determined either as at 35.1 or 35.2 or 35.3 above, the Contractor shall be requested to submit his quotation for the items supported by analysis of the rate or rates claimed, within 7 days.

35.5 If the Contractor's quotation is determined unreasonable, the Employer may order the Variation and make a change to the Contract Price which shall be based on Employer's own forecast of the effects of the Variation on the Contractor's costs.

35.6 If the Employer decides that the urgency of varying the work would prevent a quotation being given and considered without delaying the work, no quotation shall be given and the Variation shall be treated as a Compensation Event.

35.7 Under no circumstances the Contractor shall suspend the work on the plea of non-settlement of rates for items falling under this Clause.

36. Submission of bills for payment

36.1 The Contractor shall submit to the Employer monthly bills of the value of the work completed less the cumulative amount paid previously.

36.2 The Employer shall check the Contractor's bill and determine the value of the work executed which shall comprise of (i) value of the quantities of the items in the BOQ completed and (ii) valuation of Variations and Compensation Events.

36.3 The Employer may exclude any item paid in a previous bill or reduce the proportion of any item previously paid in the light of later information.

37. Payments

37.1 Payments shall be adjusted for deductions for advance payments, other recoveries in terms of the contract and taxes, at source, as applicable under the law. The Employer shall pay the Contractor the within **60 days** of submission of bill. The Contractor shall be liable to pay liquidated damages for shortfall in progress. For Progress beyond the agreed Programme, payment is subject to availability of the grants.

37.2 Items of the Works for which no rate or price has been entered in will not be paid for by the Employer and shall be deemed covered by other rates and prices in the Contract.

38. Compensation events

38.1 The following are Compensation events unless they are caused by the Contractor:

(a) The Employer does not give access to a part of the Site by the Site Possession Date stated in the Contract Data.

(b) The Employer orders a delay or does not issue drawings, specifications or instructions required for execution of works on time.
(c) The Employer instructs the Contractor to uncover or to carry out additional tests upon work which is then found to have no Defects.
(d) The Employer gives an instruction for dealing with an unforeseen condition, caused by the Employer, or additional work required for safety or other reasons.
(e) The effect on the Contractor of any of the Employer's Risks.
(f) The Employer unreasonably delays issuing a Certificate of Completion.
(g) Other Compensation Events listed in the Contract Data or mentioned in the Contract.

38.2 If a Compensation Event would cause additional cost or would prevent the work being completed before the Intended Completion Date, the Contract Price shall be increased and/or the Intended Completion Date is extended. The Employer shall decide whether and by how much the Contract Price shall be increased and whether and by how much the Intended Completion Date shall be extended.

38.3 As soon as information demonstrating the effect of each Compensation event upon the Contractor's forecast cost has been provided by the Contractor, it is to be assessed by the Employer and the Contract Price shall be adjusted accordingly. If the Contractor's forecast is deemed unreasonable, the Employer shall adjust the Contract Price based on Employer's own forecast. The Employer will assume that the Contractor will react competently and promptly to the event.

38.4 The Contractor shall not be entitled to compensation to the extent that the Employer's interests are adversely affected by the Contractor not having given early warning or not having cooperated with the Employer.

39. Tax

39.1 The rates quoted by the Contractor shall be deemed to be inclusive of the sales and other taxes that the Contractor will have to pay for the performance of this Contract. The Employer will perform such duties in regard to the deduction of such taxes at source as per applicable law.

40. Price Adjustment:

40.1 Contract price shall be adjusted for increase or decrease in rates and prices of labour, materials, fuels and lubricants in accordance with the following principles and procedures and as per formulae given in the Contract Data.[1]

(a) The price Adjustment shall apply for the work done from the date of commencement up to the end of original period of completion or extensions granted by the Employer and shall not apply to work carried out beyond the stipulated period of completion for reasons attributable to the Contractor;
(b) Price Adjustment shall be admissible from the date of opening of tenders (original or extended)

(c) The price adjustment shall be determined during each quarter from the formulae given in Contract Data.
(d) Following expressions and meanings are assigned to the work done during the quarter:

R = Total value of work done during the quarter. It will exclude value for works executed under variations for which price adjustment (if any) will be worked out separately based on the terms mutually agreed.

40.2 To the extent that full compensation for any rise or fall in costs to the contractor is not covered by the provisions of this or other Clauses in the Contract, the unit rates included in the contract shall be deemed to include amounts to cover the contingency of such other rise or fall in costs.

41. Liquidated damages

41.1 The Contractor shall pay liquidated damages to the Employer at the rate per day stated in the Contract Data for each day that the Completion Date is later than the Intended Completion Date (for the whole of the works or the milestone as stated in the Contract Data). The total amount of liquidated damages shall not exceed the amount defined in the Contract Data. The Employer may deduct liquidated damages from payments due to the Contractor. Payment of liquidated damages does not affect the Contractor's liabilities.

41.2 If the Intended Completion Date is extended after liquidated damages have been paid, the Employer shall correct any overpayment of liquidated damages by the Contractor by adjusting the next payment of bill.

42. Advance Payments:

42.1 The Employer shall make payment to the Contractor of the amounts stated in the Contract Data by the date stated in the Contract Data, against provision by the Contractor of an unconditional bank guarantee in a form acceptable to the Employer issued by a Nationalized/Scheduled Bank in amounts equal to the advance payment. The guarantee shall remain effective until the advance payment has been repaid, but the amount of the guarantee shall be progressively reduced by the amounts repaid by the Contractor. Interest will not be charged on the advance payment.

42.2 The Contractor is to use the advance payment only to pay for Mobilization expenses required specifically for execution of the Works. The Contractor shall demonstrate that advance payment has been used in this way by supplying copies of invoices or other documents to the Employer.

42.3 The advance payment shall be repaid by deducting proportionate amounts from payments otherwise due to the Contractor, following the schedule of completed percentages of the Works on a payment basis. No account shall be taken of the advance payment or its repayment in assessing valuation of the work done, variations, price adjustments, compensation events or liquidated damages.

43. Securities:

43.1 The Security deposit (including additional security for unbalanced tenders) shall be provided to the Employer no later than the date specified in the Letter of Acceptance and shall be issued in an amount and form and type of instrument acceptable to the Employer. The Security deposit shall be valid until a date 30 days from the date of expiry of Defects Liability Period and the additional security for unbalanced tenders shall be valid until a date 30 days from the date of issue of the certificate of completion.

44. Cost of Repairs:

44.1 Loss or damage to the Works or Materials to be incorporated in the Works between the Start Date and the end of the Defects Correction periods shall be remedied by the Contractor at the Contractor's cost if the loss or damage arises from the Contractor's acts or omissions.

E. Finishing the Contract

45. Completion

45.1 The Contractor shall request the Employer to issue a Certificate of Completion of the Works and the Employer will do so upon deciding that the Work is completed.

46. Taking over

46.1 The Employer shall take over the Site and the Works within seven days of issuing a certificate of Completion.

47. Final account

47.1 The Contractor shall supply to the Employer a detailed account of the total amount that the Contractor considers payable under the Contract before the end of the Defects Liability Period. The Employer shall issue a Defect Liability Certificate and certify any final payment that is due to the Contractor within 90 days of receiving the Contractor's account if it is correct and complete. If it is not, the Employer shall issue within 90 days a schedule that states the scope of the corrections or additions that are necessary. If the Final Account is still unsatisfactory after it has been resubmitted, the Employer shall decide on the amount payable to the Contractor and make payment within 60 days of receiving the Contractor's revised account.

48. As built drawings and/or Operating and Maintenance Manuals

48.1 If "as built"[2] Drawings and/or operating and maintenance manuals are required, the Contractor shall supply them by the dates stated in the Contract Data.

[2] Completion Drawings

48.2 If the Contractor does not supply the Drawings by the dates stated in the Contract Data, or they do not receive the Employer's approval, the Employer shall withhold the amount stated in the Contract Data from payments due to the Contractor.

49. Termination

49.1 The Employer may terminate the Contract if the other party causes a fundamental breach of the Contract.

49.2 Fundamental breaches of Contract include, but shall not be limited to the following:

(a) the Contractor stops work for 45 days when no stoppage of work is shown on the current Program and the stoppage has not been authorized by the Employer;

(b) the Employer instructs the Contractor to delay the progress of works and the instruction is not withdrawn within 60 days;

(c) The Contractor becomes bankrupt or goes into liquidation other than for a reconstruction or amalgamation;

(d) a payment due to the Contractor is not paid by the Employer within 90 days of the date of the submission of the bill by the Contractor.

(e) the Employer gives Notice that failure to correct a particular Defect is a fundamental breach of Contract and the Contractor fails to correct it within a reasonable period of time determined by the Employer;

(f) the Contractor does not maintain a security which is required;

(g) the Contractor has delayed the completion of works by the number of days for which the maximum amount of liquidated damages can be paid as defined in the Contract data; and

(h) if the Contractor, in the judgment of the Employer has engaged in corrupt or fraudulent practices in competing for or in the executing the Contract. For the purpose of this paragraph : "corrupt practice" means the offering, giving, receiving or soliciting of anything of value to influence the action of a public official in the procurement process or in contract execution. "Fraudulent practice" means a misrepresentation of facts in order to influence a procurement process or the execution of a contract to the detriment of the Borrower, and includes collusive practice among Tenderers (prior to or after Tender submission) designed to establish Tender prices at artificial non-competitive levels and to deprive the Borrower of the benefits of free and open competition."

49.3 When either party to the Contract gives notice of a breach of contract to the Employer for a cause other than those listed under Sub Clause 49.2 above, the Employer shall decide whether the breach is fundamental or not.

49.4 Notwithstanding the above, the Employer may terminate the Contract for convenience.

49.5 If the Contract is terminated the Contractor shall stop work immediately, make the Site safe and secure and leave the Site as soon as reasonably possible.

50. Payment upon Termination

50.1 If the Contract is terminated because of a fundamental breach of Contract by the Contractor, the Employer shall prepare bill for the value of the work done less advance payments received up to the date of the bill, less other recoveries due in terms of the contract, less taxes due to be deducted at source as per applicable law and less the percentage to apply to the work not completed as indicated in the Contract Data. Additional Liquidated Damages shall not apply. If the total amount due to the Employer exceeds any payment due to the Contractor the difference shall be a debt payable to the Employer.

50.2 If the Contract is terminated at the Employer's convenience or because of a fundamental breach of Contract by the Employer, the Employer shall prepare bill for the value of the work done, the reasonable cost of removal of Equipment, repatriation of the Contractor's personnel employed solely on the Works, and the Contractor's costs of protecting and securing the Works and less advance payments received up to the date of the certificate, less other recoveries due in terms of the contract, and less taxes due to be deducted at source as per applicable law and make payment accordingly.

51. Property

51.1 All materials on the Site, Plant, Equipment, Temporary Works and Works are deemed to be the property of the Employer, if the Contract is terminated because of a Contractor’s default.

52. Release from performance

52.1 If the Contract is frustrated by any event entirely outside the control of either the Employer or the Contractor the Employer shall certify that the Contract has been frustrated. The Contractor shall make the Site safe and stop work as quickly as possible after receiving this certificate and shall be paid for all work carried out before receiving it and for any work carried out afterwards to which commitment was made

F. Special Conditions of Contract

1. Labour :

The Contractor shall, unless otherwise provided in the Contract, make his own arrangements for the engagement of all staff and labour, local or other, and for their payment, housing, feeding and transport.

The Contractor shall, if required by the Employer, deliver to the Employer a return in detail, in such form and at such intervals as the Employer may prescribe, showing the staff and the numbers of the several classes of labour from time to time employed by the Contractor on the Site and such other information as the Employer may require.

2. Compliance with labour regulations:

During continuance of the contract, the Contractor and his sub contractors shall abide at all times by all existing labour enactments and rules made there under, regulations, notifications and bye laws of the State or Central Government or local authority and any other labour law (including rules), regulations, bye laws that may be passed or notification that may be issued under any labour law in future either by the State or the Central Government or the local authority. The Contractor shall keep the Employer indemnified in case any action is taken against the Employer by the competent authority on account of contravention of any of the provisions of any Act or rules made there under, regulations or notifications including amendments. If the Employer is caused to pay or reimburse, such amounts as may be necessary to cause or observe, or for non-observance of the provisions stipulated in the notifications/bye laws/Acts/Rules/regulations including amendments, if any, on the part of the Contractor, Employer shall have the right to deduct any money due to the Contractor including his amount of security deposit. The Employer shall also have right to recover from the Contractor any sum required or estimated to be required for making good the loss or damage suffered by the Employer.

The employees of the Contractor and the Sub-Contractor in no case shall be treated as the employees of the Employer at any point of time.

3. Protection of Environment:

The contractor shall take all reasonable steps to protect the environment on and off the Site and to avoid damage or nuisance to persons or to property of the public or others resulting from pollution, noise or other causes arising as a consequence of his methods of operation. During continuance of the contract, the contractor and his sub-contractors shall abide at all times by all existing enactments on environmental protection and rules made there under, regulations, notifications and bye-laws of the State or Central Government, or local authorities and any other law, bye-law, regulations that may be passed or notification that may be issued in this respect in future by the State or Central Government or the local authority.

4. Arbitration (Clause 24)

4.1 The procedure for arbitration shall be as follows:

(a) In case of dispute or difference arising between the Employer and the Contractor relating to any matter arising out of or connected with this agreement it shall be settled in accordance with the Arbitration and Conciliation Act 1996. The disputes or differences shall be referred to a Sole Arbitrator. The Sole Arbitrator shall be appointed by agreement between the parties; failing such agreement, by the Appointing Authority (any one of the Organizations as per list enclosed in Annexure)

(b) Arbitration proceedings shall be held at ***Bangalore***, Karnataka, India

(c) The cost and expenses of arbitration proceedings will be paid as determined by the Arbitrator. However the expenses incurred by each party in connection with the preparation, presentation, etc., shall be borne by each party itself.

(d) Performance under the contract shall continue during the arbitration proceedings and payments due the Contractor by the Employer shall not be withheld, unless they are the subject matter of the arbitration proceedings.

5 Contractor to Co-ordinate his Work with Other Contractors

5.1 The Contractor has to co-ordinate with the other concerned Contractors as already specified in Conditions of Contract for all such works as per the directions of Engineer in charge at no extra cost.

6 **Continuation of Work:**

6.1 In case of the death of a contractor after executing the agreement / commencement of the work, his legal heir, if any eligible registered contractor and willing, can execute and complete the work at the accepted tender rates irrespective of the cost of the work

Annexure:

LIST OF ORGANIZATIONS WHO ARE CONSIDERED AS APPOINTING AUTHORITY FOR APPOINTMENT OF ARBITRATORS [3]

1. Indian Council of Arbitration, New Delhi;
2. International Centre for Alternative Disputes Resolution (India);
3. Indian Roads Congress;
4. Indian Building Congress;
5. Indian Institute of Bridge Engineers;
6. Indian Institute of Public Health Engineers;
7. Institute of Water Works

.

[3] Add any other Organisation considered suitable

SECTION 6:

CONTRACT DATA

Items marked "N/A" do not apply in this Contract.

The following documents are also part of the Contract:	Clause Reference
• The Schedule of Operating and Maintenance Manuals	[48]
• The Methodology and Program of Construction	[25]
• Site Investigation Reports	[14]
• The Schedule of Key and Critical Equipment to be deployed on the work as per agreed program of construction.	[25]

The Employer is :
Name: Bangalore Water Supply and Sewerage Board represented by
Chief Engineer (Project) [1.1]

Address: Bangalore Water Supply & Sewerage Board
3rd Floor, Cauvery Bhavan D-Block,
K.G. Road, Bangalore 560009

Name of authorized Representative: Executive Engineer (New Water)
Bangalore Water Supply & Sewerage Board
7th Floor, Cauvery Bhavan D-Block,
K.G. Road, Bangalore 560009
[1.1]

The name and identification number of the Contract is : Design & Construction of Natural Biological System (NBS) to rejuven Arakavati river from Hessarghata lake to TG Halli reservoir

The start date shall be the date of issue of notice to proceed with the work. [1.1]

The Intended Completion Date for the whole of the Works is **8 Months**

Additional information to the bidders:

1. The NBS to be built as a complete manner as per specifications and drawings given in NIT but not limited to the quantities of the item, other essential items for which no separate payment will be made. This shall be considered as a EPC/ Trunkey contract till successful commissioning.
2. The key personnel with experience employed during construction of work to be submitted.
3. Staffing pattern that will be deployed during O&M should be submitted.

4. The successful bidder should exhibit the product details of bio-media that will be used for cell stimulator.
5. Contractor has to submit the design details and quantities considered for quoting the rates in complete fulfillment of the project work. If any essentials required are not mentioned in the costing, will be deemed as considered in other items.

6. Operation and Maintenance:

O&M cost for this project will be 1% of total contract value, per 6 months. This O&M cost is excluding service tax. The contractor will get 5% annual escalation per year, till the end of the O&M contract period.

The Site possession date is **15 days** from the day of issue of notice to proceed with the work

The Site location is defined in drawing. [1.1]

The Defects Liability Period is 365 days. [31]

Insurance requirements are as under: [13]

Price Adjustment Formula; Not Applicable [40]

The liquidated damages for the whole of the works are
Rs. ***0.1%*** per day of the contract value and that for the milestones are as under:

For Mile stone 1: Rs. 0.1% per day of the contract value pertaining to this mile stone*
For Mile stone 2: Rs. 0.1% per day of the contract value pertaining to this mile stone*
The maximum amount of liquidated damages for the whole of the works is ***ten*** percent of final contract price. [41]

The amounts of the advance payment are: [42]

Nature of Advance	Amount (Rs.)	Conditions to be fulfilled
1. Mobilization	5% of the Contract price	On submission of un-conditional irrevocable Bank Guarantee from Nationalised / Schedule Banks in India 30 days beyond completion of scheduled repayment of the mobilization advance.

Repayment of advance payment for mobilization : [42]

The advance loan shall be repaid with percentage deductions from the interim payments certified by the Engineer under the Contract. Deductions shall commence in the next Interim Payment Certificate following that in which the total of all such payments to the Contractor has reached not less than 15 percent of the Contract Price or 3 months from the date of payment of first installment of advance, whichever period concludes earlier, and shall be made at the rate of 7.5 percent of the amounts of all Interim Payment Certificates until such time as the loan has been repaid, always provided that the loan shall be completely repaid prior to the expiry of the original time for completion pursuant to Clauses 17 and 26.

The date by which "as-built" drawings (in scale **1:200**) in 2 sets are required is within 30 days of issue of certificate of completion of Whole or Section of the Work as the case may be. [48]

The date by which Operating and Maintenance Manuals are required is within 30 days of issue of certificate of completion of Whole or Section of the Work as the case may be. [48]

The amount to be withheld for failing to supply "as built" drawings or supply of Operation and Maintenance Manuals by the date required is Rs. 5,00,000-00 [48]

The following events shall also be fundamental breach of the contract : [49.2]

1. The contractor has contravened Sub-clause 7.1 and Clause 9 of CC.

The percentage to apply to the value of the work not completed representing the Employer's additional cost for completing the Works shall be ***30*** percent. [50.1]

Chief Engineer
(Project)

SECTION 7:

TECHNICAL SPECIFICATIONS

1. Project Background

The Thippagondanahalli watershed of Bengaluru metropolis was planned over 80 years ago as an impressive system for collection and storage of water for the developing city. In recent years, the watershed has suffered from several man-made changes that have affected the availability of fresh water dramatically - drastic increase in urban development (especially from Bengaluru), excessive water consumption, including the uncontrolled pumping of groundwater from the entire area, continuous release of contaminated sewage to the waterways and constant reduction of water re-charge to the aquifer.As can be seen in figure below, the western urban zone of Bengaluru is situated within the TG Halli catchment area, thus contributing urban pollution in the form of sewage (treated and untreated) and contaminated run-off.

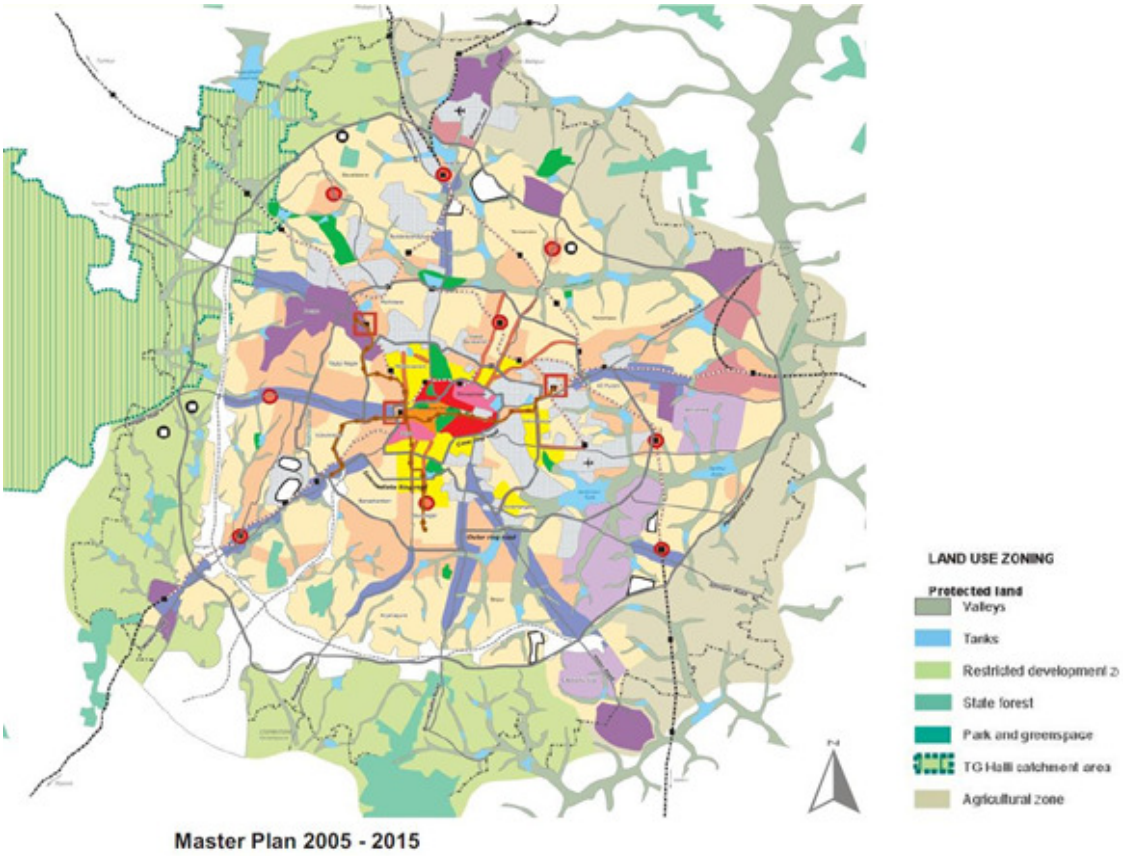

Figure: TG Halli Catchment Landuse Pattern

The water quality closer to the TG Halli reservoir, including in Arkavathy River is much better than the urban nallas in Bangalore, due to dilution with pristine water sources from the rural and undeveloped water catchment areas. This is a fragile situation since the sewage outflows from Bangalore are constantly increasing, while the pristine water sources are continuously being depleted, as well as affected by an unprecedented drought condition that has lasted almost a decade.

At present, most of the water treatment in Bengaluru is done using conventional STPs. The massive volume of water to be treated, the vast area required, the shortage in availability of electricity and thus the unstable quality of treated water output from conventional STPs, need an alternative sustainable approach using different treatment technologies, which is not dependent on external factors such as a constant and high energy supply or human intervention for constant maintenance, and does not constitute the "bottleneck" for long term, efficient and reliable planning. The break-neck speed of development and urbanization far exceeds the ability of heavy sewage infrastructure to keep pace. Retrofitting centralized conveyance and treatment systems onto already developed areas is an extremely difficult and slow task. As the catchment area of TG Halli is over 1400 km2, there is a need for a decentralized approach.

2. Project Objectives

The primary objective of this project to implement Natural Biological System (NBS), which is an on-site method for simultaneous purification of soil, water and air. The NBS is a modular system which is known to be applicable to practically all pollutant sources (urban/ sanitary, agricultural and industrial, lake and river rehabilitation etc.) and in has worked in temperate climatic condition as in Bengaluru. NBS integrates wastewater treatment with sustainable, natural methods of accomplishing the necessary processes using plants, aggregates and hydraulic conditions. The NBS system is stabilized by the vast and varied surface area of carefully selected aggregates that are placed in the optimal arrangement for filtering, adbsorbing and interacting with pollutants. Together the combinations of the biological and physical components degrade, acm3ulate, extract, and volatilize contaminants of all kinds in water, soil and the air, resulting in clean and purified outflow. The NBS technology makes use of a range of natural elements such as plants and biological supplements, aggregates with different physical and chemical properties and various hydraulic regimes. Each system can be tailored to specific case and its ecological conditions, using local natural and human resources and is designed to withstand extreme fluctuation, and to last.

In this context, BWSSB is inviting tenders for rejuvenating the Arkavathy River between Hesarghatta Reservoir to TG Halli Reservoir through construction, operation & maintenance of NBS system. Key features for proposed NBS system should be that:

- It is minimal energy intensive,

- it requires minimal maintenance and can be maintained by BWSSB with a hand holding based trainings,
- it is modular and can be tailored to suit the site,
- It should improve local bio-diversity
- It arrests the flow of pollutants and treats the effluent to at least secondary standards,
- It has a long structural life, and can be maintained with general low cost maintenance,
- It has minimal conveyance infrastructure is necessary
- There is little to none disruption during its implementation
- It uses local material and human resources
- It restores balance to nature with the power of nature herself

3. Detailed Scope of Work

3.1 Site location and Arkavathy characteristicsat and around site

Proposed NBS system needs to be installed at the confluence of the Madavara Nala with the Arkavathy River Valley, downstream of Dombarahalli, coordinates: 13.050981 N, 77.451152 E (see figure below).

This site has been selected as one of the available government lands,and is at the junction of Arkavathy River and Madavara Nallah. Another objective of selecting this site is that it is in the proximity of the city, and can serve as a model for citizens to witness sustainability in used water treatment.

Flow in Madavara Nallah primarily consists of used water that is disposed by the peripheral settlements. Prior to the confluence of Arkavathy and Madavara Nallah, water quality is Arkavathy is relatively clean and clear, and the water in the river is stagnant mostly during dry season. Small freshwater crustaceans as well as a variety of microflora (including Lemna spp), waterbugs and presence of fish testifies a healthy, though tepid, benthic environment. The presence of natural and artificial dams (used as roads), including prolific plant growth that extends horizontally across the channel several hundred meters upstream of the confluence with Madavara Nallah, assists in maintaining high quality of the weak flow and preventing sudden deluges of organic matter that would quickly destroy the pristine yet fragile ecosystem. At the confluence, Madavara Nallah disposes used water, leading to increase in turbidity and foul odour. Such flow continues, unabated, until it reaches the TG Halli Reservoir.

3.2 Project implementation overview

The NBS design at proposed site has no moving parts, and all the stages of water treatment using NBS are "built-in". The implementation must be executed according to instructions, as provided in the later section. BWSSB has identified concrete as construction material for the NBS envelop, due to low footprint, high strength and impermeability.

- The total length of NBS system is approximately 800 meters, with wetland of 800m on either side of NBS system.
- The NBS is designed to treat the Madavara Nala flow (12 MLD) during dry season, while allowing diluted monsoon flows and the original Arkavathy River to enter the river valley unimpeded.
- The NBS should contain all the necessary aspects of wastewater treatment "integrated" into a tailored landscape.
- Overall, the NBS will consists of an initial quieting/settling area. The flow will then be split to two separate canals on parallel banks of the River.
- These canals will feed a series of 5 graduated NBS treatment basins along each bank.
- Each basin will be a hydraulically independent unit, i.e. the walls and floor of the basins are sealed and impervious to water.
- Purified water will then be released to the Arkavathy River via a collection and distribution manifold.
- It should be noted that due to the constraints on space the system must be designed as a long and not wide system. This is especially important for the settling area.
- As the site conditions permit, the length of the settling area will be elongated in the upstream direction.
- BWSSB reemphasizes the importance of dedicating as much space as possible

space for settling, and the contractor must consider options to the expansion of the current design or the creation of more settling areas in upstream portions of the Madavara Nala.

- In summary, the settling area designated in the Plans (provided in the later section) shall be thought of as representative and will be extended or repeated in the upstream portion of the Madavara Nala

BWSSB envisages following work flow process:

- Onsite measurement and marking of heights onsite,
- Perform earthworks (cut or fill as necessary) on the sides of the Arkavathy River to achieve appropriate elevation,
- Construction of the NBS basins and canals, excluding vegetation
- Temporary Diversion of the Madavara Nalla before entry to Arkavathy River during the construction period,
- Earthworks of the Madavara Nalla to ensure appropriate elevation and strength to withstand flood gate construction
- Construction of Flood Gates/Settling areas, hydraulic connections between FG and Canals
- Reconnecting Madavara Nalla to Arkavathy River
- Planting, fine-tuning

3.3 Components of NBS

Please refer to drawings provided in the appendix for following:

- Arkavathy NBS schematic (Drawing 1)
- Wetland Cross Section (Drawing 2)
- Gravel Cross Section (Drawing 3)

Following components have been identified for proposed NBS, which are described in details in subsequent sections:

1. Topographic survey
2. Soil investigations
3. Earthworks
4. Flood gates (with silt trap and settling basin appurtenances)
5. Canals
6. NBS Basins
7. Arkavathy River remodelling
8. Bio media for plant growth

3.3.1 Topographic Survey

The contractor is asked to perform topographic survey for following stretches:

- 300 m upstream in Madavara Nallah from the confluence point,
- 1,500 m downstream of Arkavathy River from the confluence point,

The specification of the topographic survey are as follows:

- All survey data, results, reports and recommendations shall be prepared in metric unit. Coordinates shall be in WGS84 /UTM Zone 43 N coordinate reference system (EPSG 32643).
- The established Bench Mark (BM) shall be linked to the nearest corridor route or area to be surveyed.
- Temporary Bench Mark (TBM) shall be established at an interval not greater than 500m.
- The line type & legend used in the drawings shall be unambiguous & consistent.
- A georeferenced plan in AutoCAD format shall be provided showing exact location of survey and extent of all surveyed features.
- ESRI ArcGIS shapefile (or equivalent format such as Google Earth KML) showing the location of all surveyed lakes and their extents shall be prepared and submitted. Attributes to include date surveyed, name of relevant DWG file and name of relevant photos.
- Photographs of each inlet/outlet structure; looking downstream/upstream from a point a short distance from the feature should be taken and geo-tagged. Where relevant and possible, vegetation (e.g. nettles, grass) should be cleared so that the complete structure is visible. Photographs are to be named according to the Lake they represent.
- All photographs of structures must contain a scale, such as a levelling staff, to aid interpretation.
- A csv file for survey points should be supplied in a form similar to the example shown below. The format is to be in x y z format where x y represents eastings northings (in the EPSG 32643, coordinate reference system) and z represents elevations (referred to mean sea level (MSL) or an approved datum) and these shall be in accordance with the country's system and upto 3 decimal . Elevation values are to include only ground and bed elevations; not soffit levels, parapet levels etc.

3.3.2 Soil investigation

- In areas which have already been developed, the contractor shall take advantage of existing local knowledge, record of trial pits, bore holes etc in the vicinity and the type of foundations adopted and behaviour of existing structures particularly those of similar nature to the ones proposed for this project.
- The contractor shall make use of information gathered from quarries, unlined

wells, cuttings from nearby areas etc. The general topography of the nearby areas will often give some indication about the variation of the soil conditions which are likely to exist.

- The contractor shall gather data regarding the removal of overburden by excavation, erosion or landslides in the areas which may give an idea of the amount of reconsolidation that the soil strata has undergone. Similarly data regarding recent fills shall also be studied to determine the characteristics of the fill as well as the original strata.
- The water level in Arkavathy and Madavara Nallah, if any, in the neighbourhood shall be noted. Reliable information regarding ground water level shall also be gathered from water level in the nearby wells.
- It is essential that the equipments/instruments are properly calibrated at the commencement of the work so that they represent true values and submit the test reports to the engineer-in-charge. If the engineer- in-charge so desires, the contractor shall arrange for having the instruments tested in presence of the engineer at an approved laboratory at the contractor's cost and the test reports shall be submitted to the engineer-in-charge.

3.3.3 Earthwork

The Heights of the NBS is critical. A hydraulic pressure of 0.5 m is to be maintained across each unique basin and canal area (refer to the drawings in the appendix section). Estimations of the earthworks is based on the height of the NBS construction relative to existing height, and this should be derived from the topographic survey, to be performed by the contractor. While calculating the earthworks, three separate cross-sections will be used (top, middle, end) throughout the system and average height of the NBS relative to floor level will be calculated. (Please refer to Drawing 2 in the Appendix for details).

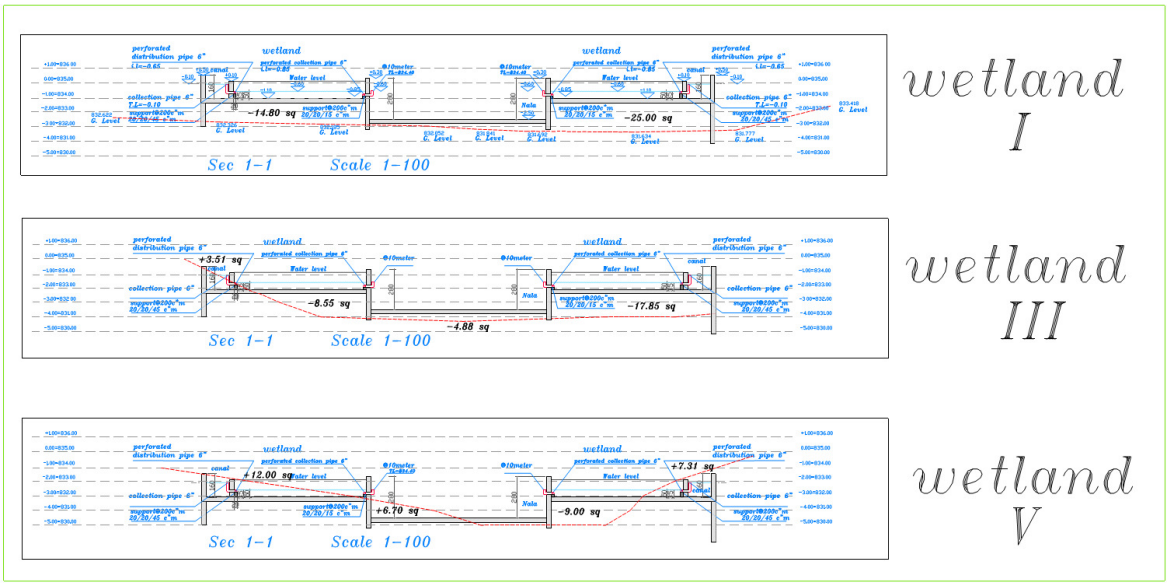

It is expected that a competent constructor would suggest alternatives to soil fill, e.g. columns, based on efficacy and economics.

3.3.4 Flood gates

The proposed flood gate are in two-stage:

- In the first chamber influent water is quieted and settled.
- The middle layer of the water (between 60-120 cm) is able to pass through to the second chamber via gaps in the wall
- In the second stage, additional settling occurs. The water is passed to the canals via 8" pipes equipped with a gate valve.
- Water in excess of the prescribed flow rates (4-5 MLD per canal) will enter the Arkavathy River.

Construction material for the flood gates shall be concrete or masonry, capable of withstanding the pressures of high flow rates. Footing shall be correspondingly robust to the weight of the support frame and the water that will reach 1.8 m height.

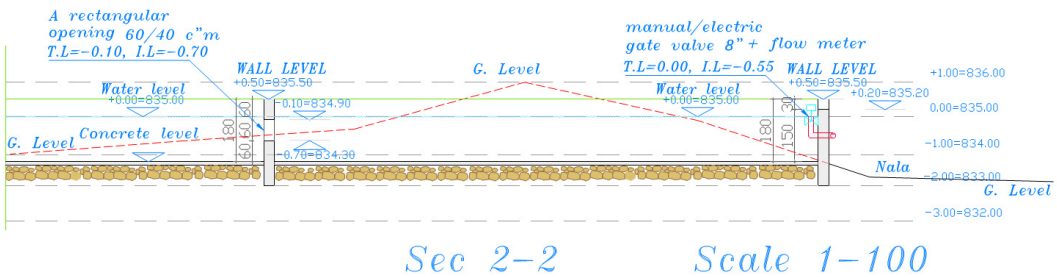

Slope of the FG floor (as in the whole system) 0.5-1%.

3.3.5 Canals

The canals are simple troughs that serve to convey water from the Flood gate to the NBS treatment basins. The canals will be constructed of any strong impermeable material, with preference to concrete as it will minimize the canal footprint.

The length of the canal is approximately 900 meters on each bank.

The canal dimensions are (refer to Drawing 1):

Canal Component	Dimension
Cross section (width) • 1st subdivision	 1.6 m 1.4 m

Canal Component	Dimension
• 2nd subdivision • 3rd subdivision • 4th subdivision • 5th subdivision	1.2 m 1.0 m 0.8 m
Outer wall height	1.6 m
Inner wall height	1.4 m
Water Height (controlled by 6″ pipes)	1.2 m

- The canal is subdivided into 5 basins on each bank in order to maintain water height in the canal of approximately uniform height, 0.5 m above the water level in the NBS.
- These divisions correspond to the boundaries of the discreet NBS basins.
- At each respective subdivision, the canal narrows by 20 cm.
- The water level of each subdivision falls by 0.5 m, with corresponding decrease in wall elevation.
- The subdivision is a concrete wall barrier 1.4 m high, with a 6″ pipe embedded, invert level (relative to top of the dividing wall) -0.45, top level, -.2, with ability to tilt.

Relative to water levels of the flood gate, the components of the canals and respective subdivisions are listed below:

Subdivision →		1	2	3	4	5
Component		Height relative to Water Level in Flood Gate				
Outer wall		0.5	0	-0.5	-1	-1.5
Inner wall		0.1	-0.4	-0.9	-1.4	-1.9
Floor		-1.1	-1.6	-2.1	-2.6	-3.1
6″ collection pipe @10 m to NBS	TL	-0.1	-0.6	-1.1	-1.6	-2.1
	IL	-0.65	-1.15	-1.65	-2.15	-2.65

Subdivision →		1	2	3	4	5
Dividing wall		0.1	-0.4	-0.9	-1.4	-1.9
6″ collection pipe in dividing wall	TL	-0.1	-0.6	-1.1	-1.6	-2.1
	IL	-0.35	-0.85	-1.35	-1.85	-2.35
Water Level		-0.1	-0.6	-1.1	-1.6	-2.1

TL= Top Level; IL= Invert Level

Slope of the canals (as in rest of the system) 0.5-1%.

It is important to note here that the care must be taken to ensure appropriate elevation of the Canal Subdivisions, without compromise. This will entail appropriate leveling and filling of the floor, laying appropriate support platform, preferably of concrete, but can be a different material per construction designer knowledge. Also, the canal construction must be impermeable.

3.3.6 NBS Basin

The NBS envelope is to be constructed with reinforced concrete grade M-25. The construction in any event must have a small footprint since the area allocated to the NBS is not large to begin with.

The Cross Section of the NBS Basin is displayed below (also refer to Drawing 1 and 2)

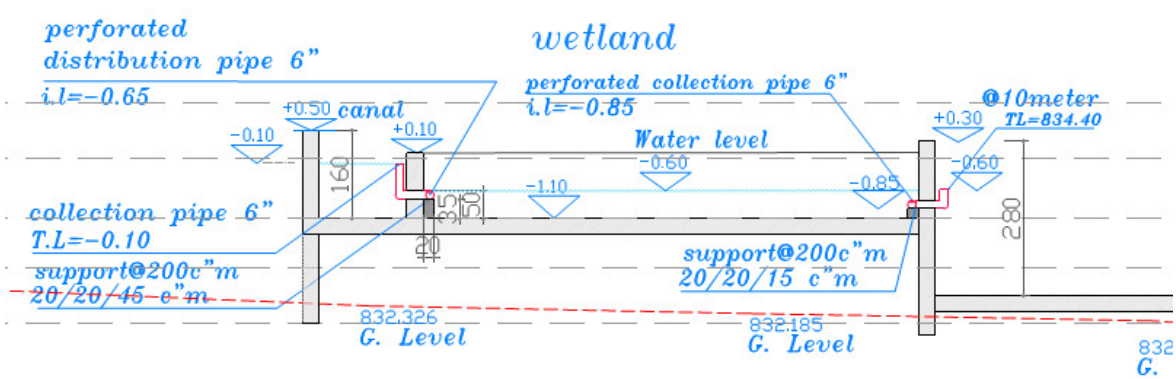

There is to be five NBS basins on each bank.

- Each basin is essentially the same except for a drop of 0.5 m from one basin to the next.
- The NBS inner wall- i.e. between the canal and the NBS shall be 1.2 m high, and the outer wall, i.e. between the NBS and the Arkavathy shall be 1.4 m high.
- Appropriate filling, compaction, building of support walls etc will need to be accomplished in order to ensure the heights of the entire system as indicated in

the Design.

- The cross-section of the NBS in this case is 10 m, while the lengths of the basins vary from around 150-170 m.

3.3.7 Arkavathy Remodelling

No changes in Arkavathy River channel are envisaged. There is no need for cementing the floor. The NBS Walls will serve as support of the banks. Onsite needs must be assessed as the construction progresses if additional support columns/footing is necessary.

3.3.8 Bio media for plant growth

A supply of appropriate bio media natural extract for the enhancement of biological processes and plant growth will be provided with the system implementation. The preferred bio media has to be added directly to the water supply in drops or as slow-release tabs in the gravel for the successful deep-rooting and boosting of biological activity during the first four months of operation.

3.3.9 Treated effluent quality

The output effluent has following desired parameters:

Sr. No.	Design parameter	Influent parameters	Treated Water Quality Value to be considered for design
1.	pH	6-9	6-9
2.	BOD5@20oC	300 ppm	< 10 ppm
3.	COD	650 ppm	< 50 ppm
4.	TSS	650 ppm	< 10 ppm
5.	Fecal coliform	---	< 100 MPN/100 ml

4. NBS Hydraulics

Following section presents the hydraulic components required in the system. Details of Piping and Valves/Meters required in the system are provided in the end of this section in form of a table.

4.1 Flood gates to canals

The transfer of water from flood gate to canals is via 8″ pipes. Flow through the pipes will be controlled via gate valve.

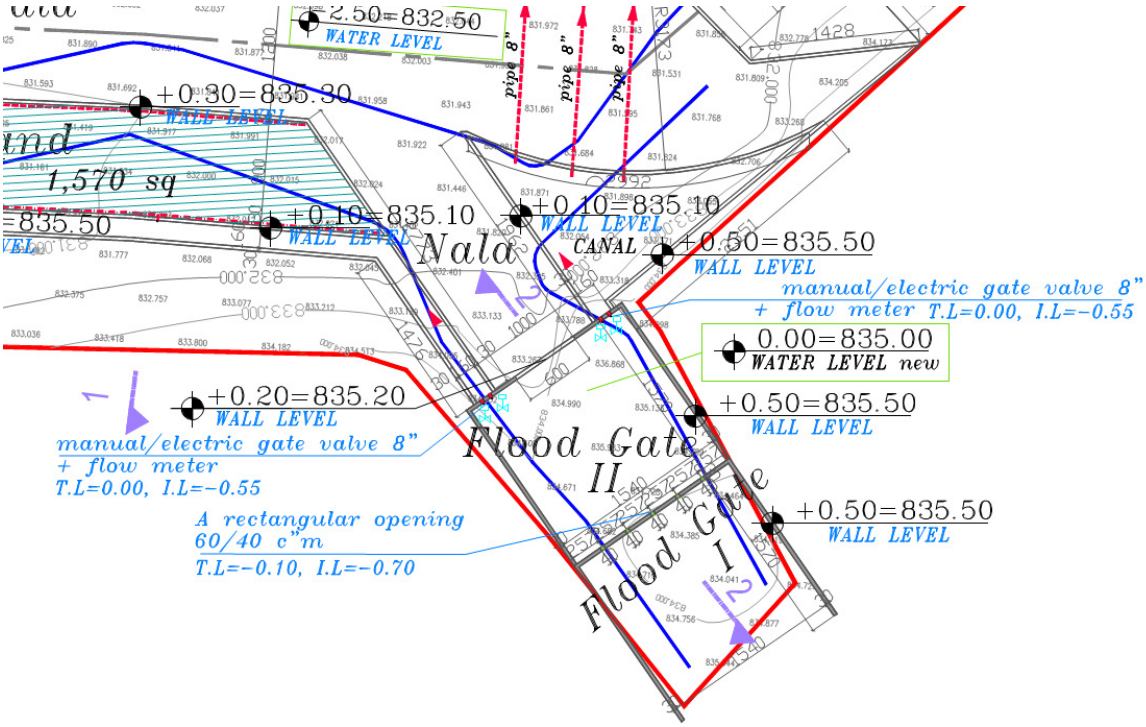

- There are two sets of gate valves in the corners of Flood Gate II.
- On the left corner, water is transferred directly to the South Canal via two 8″ pipes outfitted with meter and gate valve.
- On the right corner, the two 8″ pipes transfer the water first into a triangular area approximately 165 m2.
- From there the water is conveyed with 3 X 8″ pipes across the Arkavathy and to the North Canal.
- The 3 nos of 8″ pipes shall be of metal construction to prevent breakage by stones or other debris carried by the Arkavathy during Monsoon.
- The 3 nos. of 8″ pipes shall be located at elevation -0.20 cm relative to water height in the flood gate. The 3 nos. of 8″ pipes shall be of slope 0.5% and will cross through the North Wetland and pierce the canal wall at -0.35 elevation relative to the Water Level in the Flood Gate.
- Length of the pipes approximately 25 m.

4.2 Canal to canal subdivision

The canals contain 6″ pipes for transferring from one subdivision to the next. These pipes are of

- PVC, 6″ ø, including 90° joint,
- Vertical length of pipe .25 m,

- Horizontal length 0.5 m,
- o-ring joint type.

The Pipes are able to be tilted to adjust the height of the water in the canal subdivision.

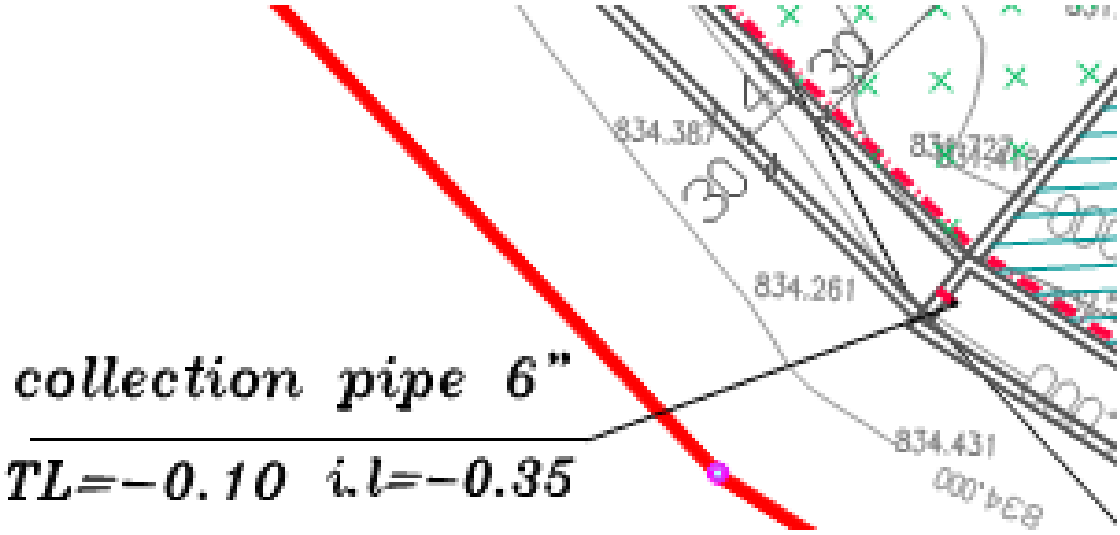

4.3 Canal to NBS basin

For transfer of the water to the NBS:

- 6"ø pipes are located every 10 m on the inner canal wall,
- Invert level of pipe 35 cm from canal floor,
- Top level of pipe 1.2 m from canal floor.

The top of the pipe should be adjustable by tilting, i.e. the 90° joint should be of rubber o-ring type.

Support blocks for the pipes will be:

- For distribution pipes, 20X20X45 cm @ 2m,
- For collection pipes 20X20X15 cm @ 2m.

The blocks shall be of brick or clay (e.g. laterite) that will not disintegrate in water, i.e. not concrete blocks.

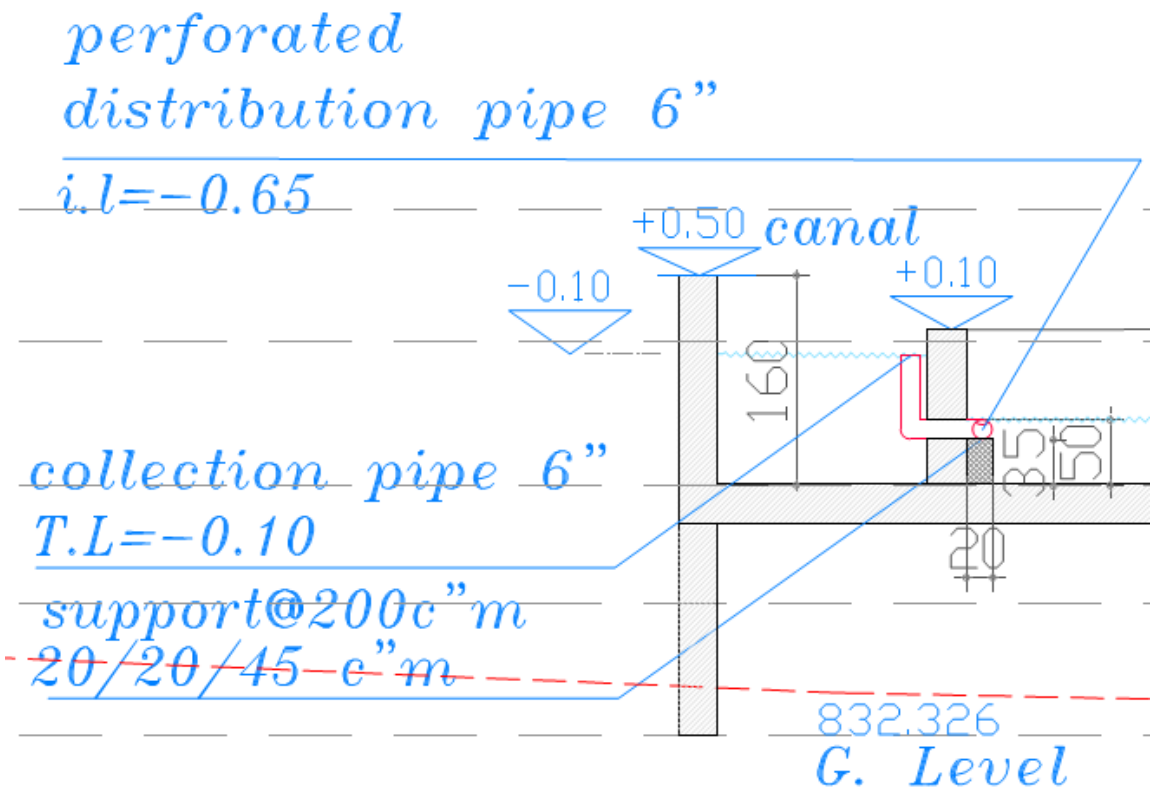

4.4 NBS Basin to Arkavathy River

- The purified water will be collected from the NBS Basins via a collection pipe (6" ø) lain 15 cm from the floor adjacent to theArkavathy, along the whole length of the wall.
- The pipe is perforated with 50 mm holes, each 1 m apart, facing the floor.
- The pipe is supported with 20X20X15 cm blocks each 2 m.
- At 10 m intervals, the pipe is joined by a t-junction allowing a horizontal segment to pierce through the NBS basin wall to the Arkavathy River.
- The end of the horizontal segment is a 90°joint fitted with a 30 cm piece of pipe that can be tilted to control the water level in the NBS Basin.

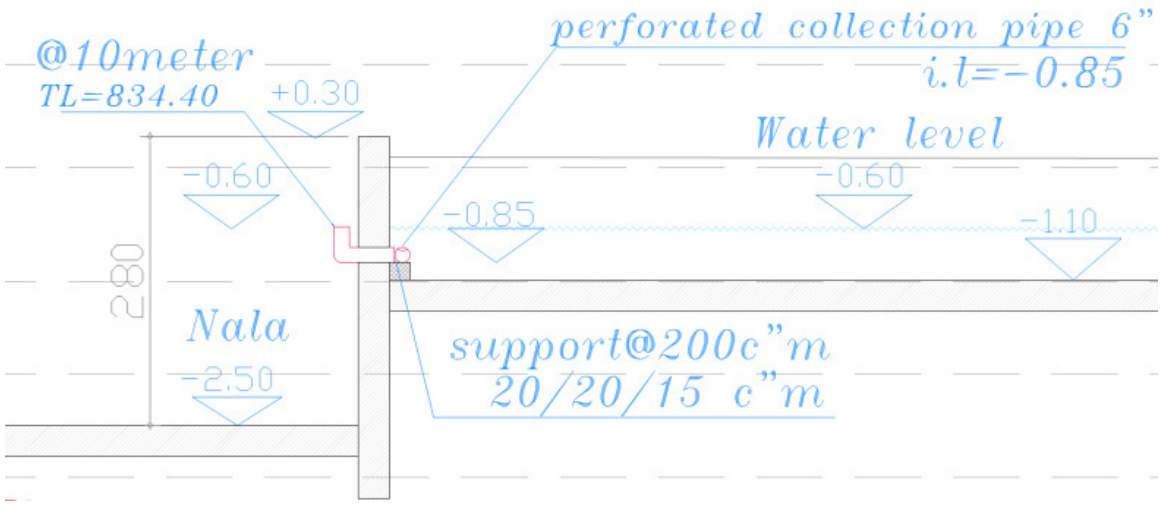

Table 1: List of Hydraulic Piping and Valves/Meters Required in the System

Purpose	Specification
Collection from Flood Gate to South Canal and Triangular Settling area	PVC, 8″ ø, including 90° joint, vertical length of pipe .55 m, horizontal length 0.5 m, o-ring joint type
Transfer from Flood Gate to North Canal	Metal, 8″ ø
Distribution to NBS from canal	PVC, 6″ ø, including 90° joint, vertical length of pipe .55 m, horizontal length 0.5 m, o-ring joint type
Transfer from one canal subdivision to next	PVC, 6″ ø, including 90° joint, vertical length of pipe .25 m, horizontal length 0.5 m, o-ring joint type
Distribution and collection within the NBS	PVC, 6″ ø, perforated with 50 mm holes each 1 m, in an equal and level manner along the whole pipe. Placement according to detailed instruction in annexure 6. Also with necessary connections (straight and t-joint) for the length of the pipe, and to connect with canal inlet and Arkavathi outlet,
Release to Arkavathi from NBS	PVC, 6″ ø, including 90° joint, vertical length of pipe .25 m, horizontal length 0.5

Purpose	Specification
	m, o-ring joint type

5. Aggregates in the NBS Basin

The aggregates in the NBS shall be chosen based on local availability, porosity, adsorptive properties and reactivity with sewage contaminants. The sizes and placement are designed to account for filtration, hydraulic properties including subsurface flow, prevention of blockages, and ability to sustain a healthy root zone for the plant development.

Based on the criteria, the selected aggregates are assorted sizes of granite and lime. Layout of the gravel per Drawing 2 and 3. It is imperative that gravel placement follow the design exactly. Some important notes are:

- The distribution and collection pipes must be covered/rest on Oversized Granite Aggregate (>60 mm) per
- Various granite and Lime aggregates, will be lain in consecutive vertical layers, per the
- Top layer of 6mm granite 5 cm deep will overlay the entire surface. This is the planting medium and shall be undisturbed as possible after placement.
- The gravels shall be ordered from reliable and clean sources with minimal dirt, powder and clay residues.
- Appropriate care shall be taken to ensure that the placement of the gravels match the designs.

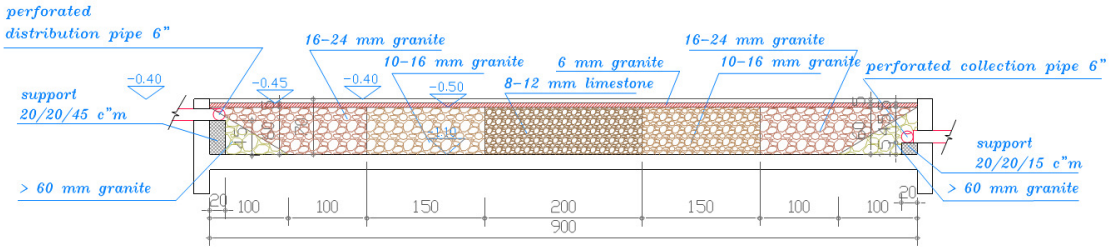

Gravel Cross Section Scale 1-50

6. Plants in the NBS Basin

The plants chosen shall be selected based on growth characteristics and adaptability to the harsh environment of sewage flow. Each NBS basin shall receive an identical set of plants, as each cell is essentially a replicate of the same design. This is necessary to maintain steady quality, maintenance and growth conditions. Designer should be consulted per the supply and condition of the plants.

Placement of the recommended plant species as per the table below. Density of planting, 3 plants /m2.

Meters (cross-section)	Plant Species	Picture
0-2, 8-10	ELEOCHARIS GENICULATA	
2-4	THALIA sp T. delabata, T. geniculata, per availability	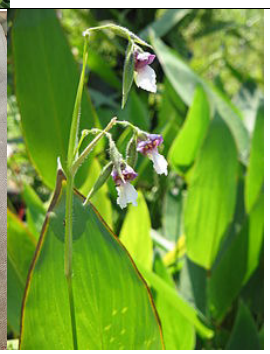
4-6	CANNA SP. S. indica, S. zankri, per availability	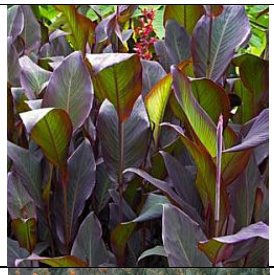
6-8	SCIRPUS SP S. lacustris; S. cernuus, per availability	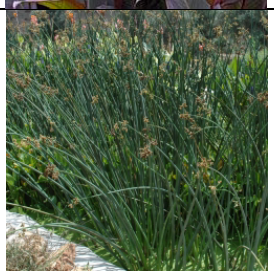

Meters (cross-section)	Plant Species	Picture
Distributed between plantings	BACOPA MONIERI, HYDROCOTYLE VULGARIS	

Other recommended plants are:

Canna	
Cattail	

Umbrella Palm	
Elephant ear (green Taro) Colacasia esculenta	

SECTION 8:

DRAWINGS

Refer in above Technical Specification

SECTION 9:

BILL OF QUANTITIES

Note:

(1) Item for which no rate or price has been entered in will not be paid for by the Employer when executed and shall be deemed covered by the other rates and prices in the Bill of Quantities (refer: ITB Clause 11.2 and CC Clause 37.2).

(2) Unit rates and prices shall be quoted by the Tenderer in Indian Rupees.

(3) Where there is a discrepancy between the rate in figures and words, the lower of the two will govern. [ITT Clause 24.1(a)]

(4) Where there is a discrepancy between the unit rate and the line item total resulting from multiplying the unit rate by quantity, the unit rate quoted shall govern [ITT Clause 24.1 (b)]

(5) This shall be considered as a EPC/ Turnkey contract and lump sum price shall be quoted, Considering the specifications and drawings given in section -7 Technical Specifications.

SL No	Description	Rate	Amount
1	Designing Providing and constructing engineered wet land with RCC chambers of suitable capacity with required excavation, embankment, support structures, pitching works, , including necessary flood control system, settling chambers, including inlet feeding pipes and out let collection pipe lines, valves, diversion channel, controlling Gates arrangements, filter media fillings of required specification and quantity, planting of selected Aquatic plants of required numbers, etc. complete to treat sewage to the specified characteristics mentioned in the contract, including topographical survey, soil testing, sample collection and testing etc., complete in fulfilment of NBS system commissioning as specified in the technical specification and drawings of the contract work. Following are the items that are part this contract. Please be noted that the item can be added that are essential for completion of the work.		
a	Earth work excavation for pipeline trenches (except building works) including barricading depositing on bank with all lead including danger lighting and using sight rails and boning rods including shoring, strutting, bailing out water at every 100 meters wherever necessary as directed in the following starta		
	i) -do- In all soils mixed with boulders of 30 cms size upto and exclusive of disintegrated rock.		
	a) 0-2 m M3		
	b) 2-4 m		

SL No	Description	Rate	Amount
	c) 4-6 m		
	ii)-do- in disintegrated rock, soft rock, soft shale and medium hard rock comprising of Lime stone, sand stone hard shale, schiest, fissured rock without resorting to blasting.		
	a) 0-2 m		
	b) 2-4 m		
	c) 4-6 m		
b	Providing & Filling in foundation with granite/trap broken metel 100 mm and down size with approved sand including hand packing, ramming, watering, including cost of all materials and labour with lead and lift complete as per specification.		
c	Providing and laying in position plain cement concrete of nominal mix 1:3:6with cement @220 kgs with 40mm and down size graded granite metal, coarse aggregates @ 0.892 m3 and fine aggregates @ 0.465 m3 machine mixed, concrete laid in layers not exceeding 15 cms thick well compacted foundation plinth and cills including cost of all material, labour HOD of machinery, curing ., complete as per specifications		
d	Providing and laying in concrete of nominal mix **M25 with cement @340 kgs** with 20mm and down size graded granite metal, coarse aggregates @ 0.70 m3 and fine aggregates @ 0.47 m3 machine mixed with superplastiser at 3 lts confirming to IS9103-1999 reaffirmed-2008, machine mixed, concrete laid in layer not exceeding 15 cms thick, vibrated for all works in foundation plinth and ground floor level for roof slabs, staircasr, lintles, retaining wall, walls (any thikness) including attached plasters, colums, piers, abutments, pillars, posts, struts, buttresses, string or lacking courses, parapets, coping bed blocks, anchor blocks, plain windows cills, fillets etc including cost of all materials, labour HOM of machinery, curing ., complete as per specifications		
e	Providing TMT steel reinforcement for RCC work including straightening cutting bending hooking placing in position lapping and or welding wherever required tying with binding wire and achoring to the adjoining members whereevr necessary complete as per design(laps and wastage shall not be measured and paid) cost of materials, labour, HOM of specificationa TMT bars Fe 500		
f	Supplying HDPE pipes conforming to IS 4984:1995 with latest amendments and conveying to work site including loading and unloading at both destination and rolling, lowering into trenches, laying true to line and jointing of pipes and specials (excluding cost of specials) giving hydraulic test as per relevant ISS with all lead and lift including encasing the pipe alround to a depth of not less than 15cms with soft gravel or selected earth available from the excavation testing and commissioning. The rate is exclusive of required specials and fittings wherever necessary like saddle Tee, Stub ends, flanged sets, bends,reducers etc., complete (contractor will make his own arrangements for procuring water for testing)		
	HDPE Grade - PE80 conforming to IS 4984 - 1995		
	Distribution and collection network		
	A) HDPE 200 mm dia pipe, perforated with 50 mm holes each 1 m, in an equal and level manner along the whole pipe. Placement according to detailed instruction in annexure 6. Also with necessary connections (straight and t-joint) for the length of the pipe, and to connect with canal inlet and Arkavathi outlet,		
	200 mm dia PN 6-0		
	B) HDPE 180 mm dia pipe including 90° joint, vertical length of pipe .25 m, horizontal length 0.5 m, o-ring joint type		
	250 mm dia PN 6-0		
	C)HDPE315 mm dia pipe, including 90° joint, vertical length of pipe .55 m, horizontal length 0.5 m, o-ring joint type		

SL No	Description			Rate	Amount
	315 mm dia PN 6-0				
g	Aggregates				
	A)60 mm granite				
	B)16-24 mm granite				
	C)10-16 mm granite				
	D)8-12 mm granite				
	E)6 mm granite				
h	Select Plants per DPR section 2.10, procurement and placement				
i	Biomedia				
j	300 mm Gate valves with accessories				
k	250 mm Gate valves with accessories				
l	Manual Mechanical screens				
m	Sedimentation basin				
n	Topograghic survey				
o	Soil Survey				
		Job	**1**		
		Grand Total			

SECTION 10:
FORMAT OF BANK GUARANTEE FOR SECURITY DEPOSIT

To: _____ [name of Employer]
_____ [address of Employer]

WHEREAS _____ [name and address of Contractor] (hereinafter called "the Contractor") has undertaken, in pursuance of Contract No. _____ dated _____ to execute _____ [name of Contract and brief description of Works] (hereinafter called "the Contract");

AND WHEREAS it has been stipulated by you in the said Contract that the Contractor shall furnish you with a Bank Guarantee by a recognized bank for the sum specified therein as security for compliance with his obligations in accordance with the Contract;

AND WHEREAS we have agreed to give the Contractor such a Bank Guarantee;

NOW THEREFORE we hereby affirm that we are the Guarantor and responsible to you, on behalf of the Contractor, up to a total of Rs._____ [amount of guarantee] [63]_Rupees_____ _____[in words], and we undertake to pay you, upon your first written demand and without cavil or argument, any sum or sums within the limits of _____ [amount of guarantee][64] as aforesaid without your needing to prove or to show grounds or reasons for your demand for the sum specified therein.

We hereby waive the necessity of your demanding the said debt from the Contractor before presenting us with the demand.

We further agree that no change or addition to or other modification of the terms of the Contract or of the Works to be performed there under or of any of the Contract documents which may be made between you and the Contractor shall in any way release us from any liability under this guarantee, and we hereby waive notice of any such change, addition or modification.

This guarantee shall be valid until 30 days from the date of expiry of the Defects Liability Period.

Signature and seal of the guarantor _____
Name of Bank _____
Address _____
Date _____

[63] An amount shall be inserted by the Guarantor, representing the percentage of the Contract Price specified in the Contract

[64] An amount shall be inserted by the Guarantor, representing the percentage of the Contract Price specified in the Contract.